FUJIFILM

EN

instax mini 99

Instant Camera

User's Guide/Safety Precautions

FI036-EN-WW-01

Caution when handling the INSTAX mini instant film pack

EN Do not open the back camera cover until you have used all photos in the loaded INSTAX mini film pack. Opening the camera door will expose the remainder of the unused film pack, turning it white and rendering it no longer usable.

⚠ CAUTION

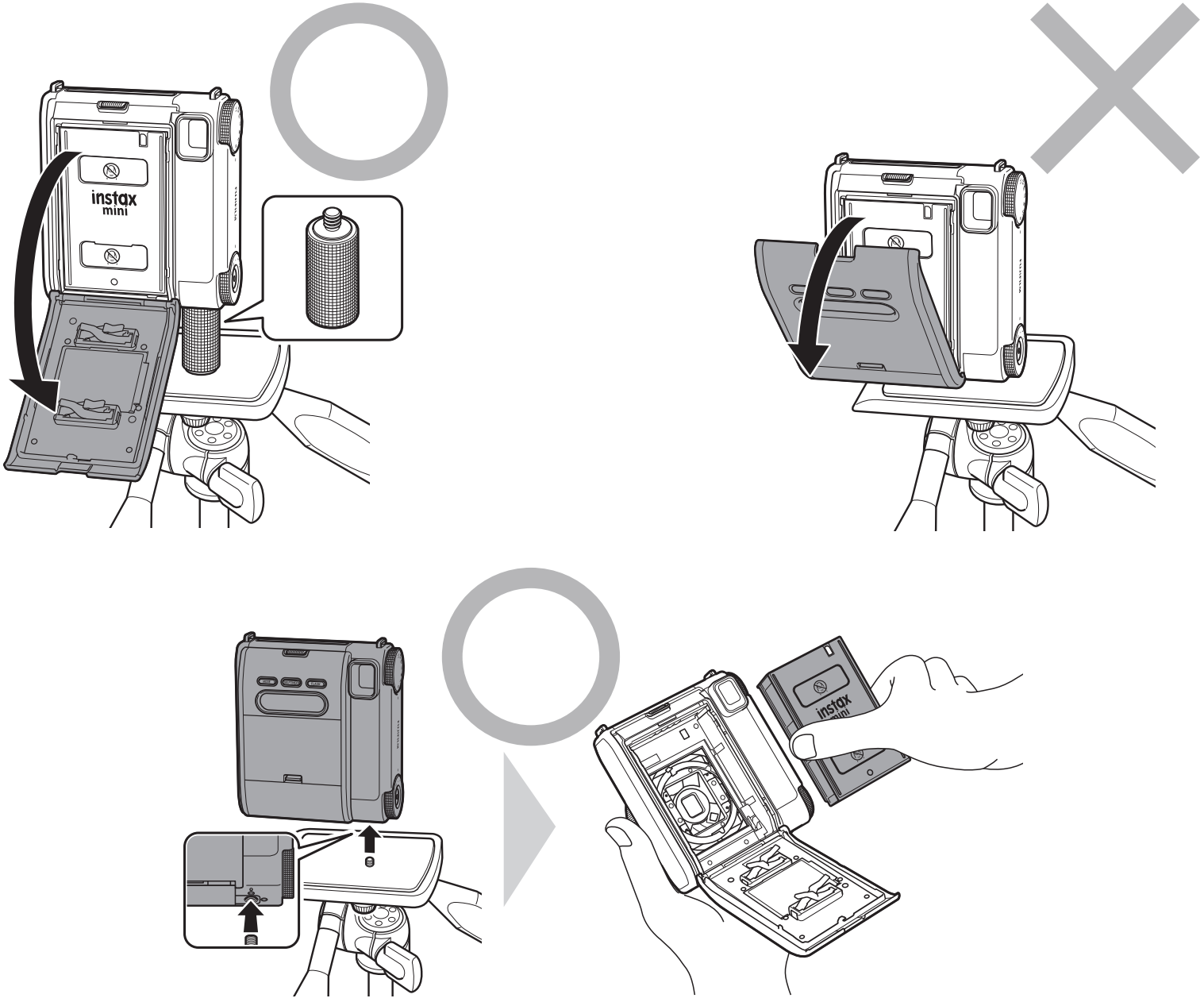

EN When using a tripod, always attach the included Base Grip with Tripod Mount to the camera, or remove the camera from the tripod to replace the film.

1

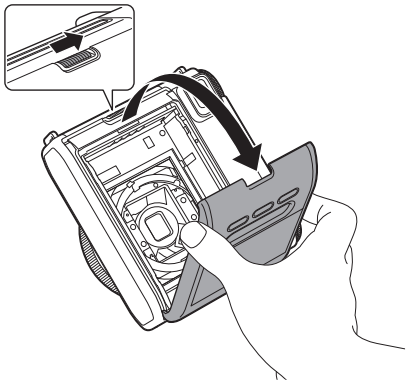

3

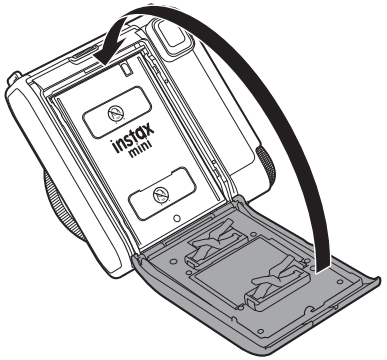

2

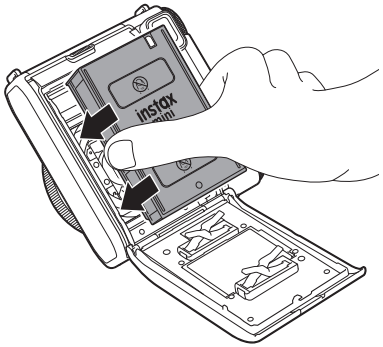

4

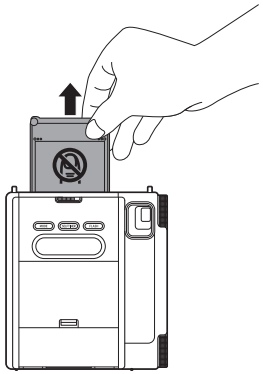

1

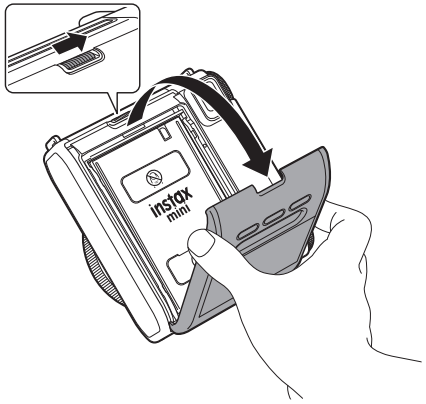

2

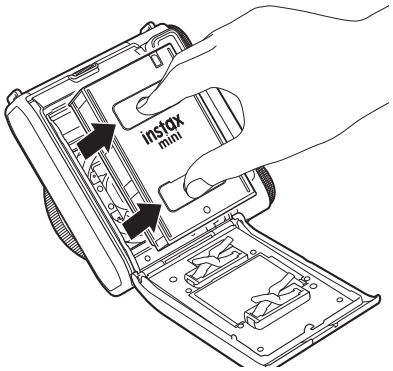

ENGLISH

Before Use

Before using the camera, check you have the following:

Supplied Accessories

• Shoulder strap (1)

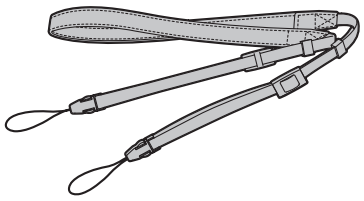

• USB Type-C cable (1)

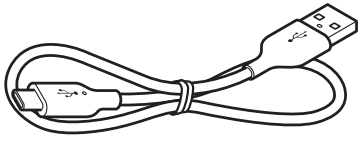

（BO38A34001）

• Battery charger
BC-70C

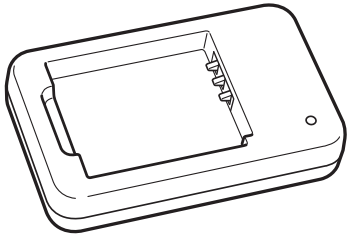

• Rechargeable battery
NP-70S

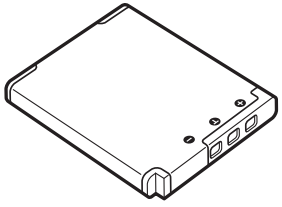

• Base Grip with Tripod Mount

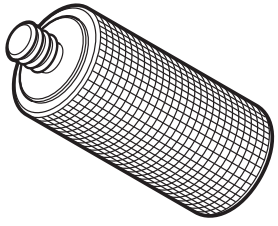

• User's Guide (This booklet)

- Use the strap over your shoulder, not around your neck.
- Make sure the shoulder strap does not hang over the film ejection slot.
- The battery has not been fully charged at the factory. Be sure to charge the battery before using the camera.
- When loading and unloading film using a tripod, please use the included Base Grip with Tripod Mount.

This book provides a quick guide to the use of the "INSTAX mini 99".

Part Names

Front

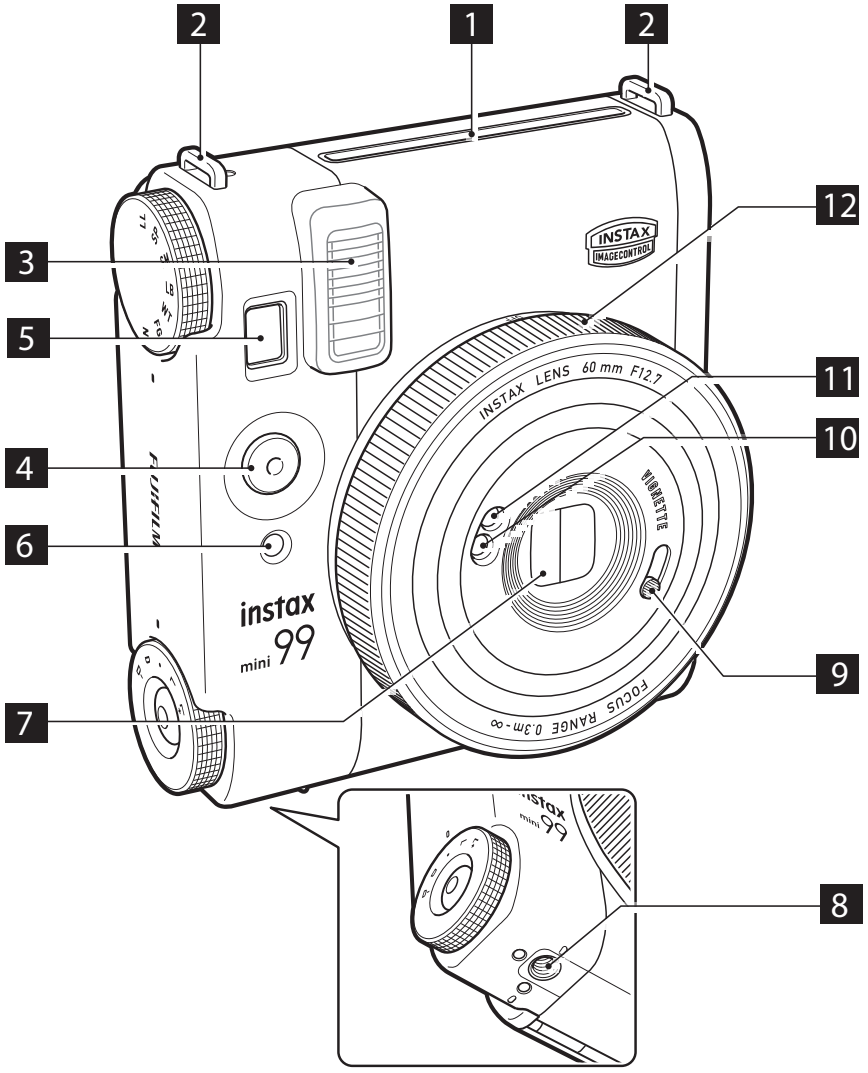

Rear

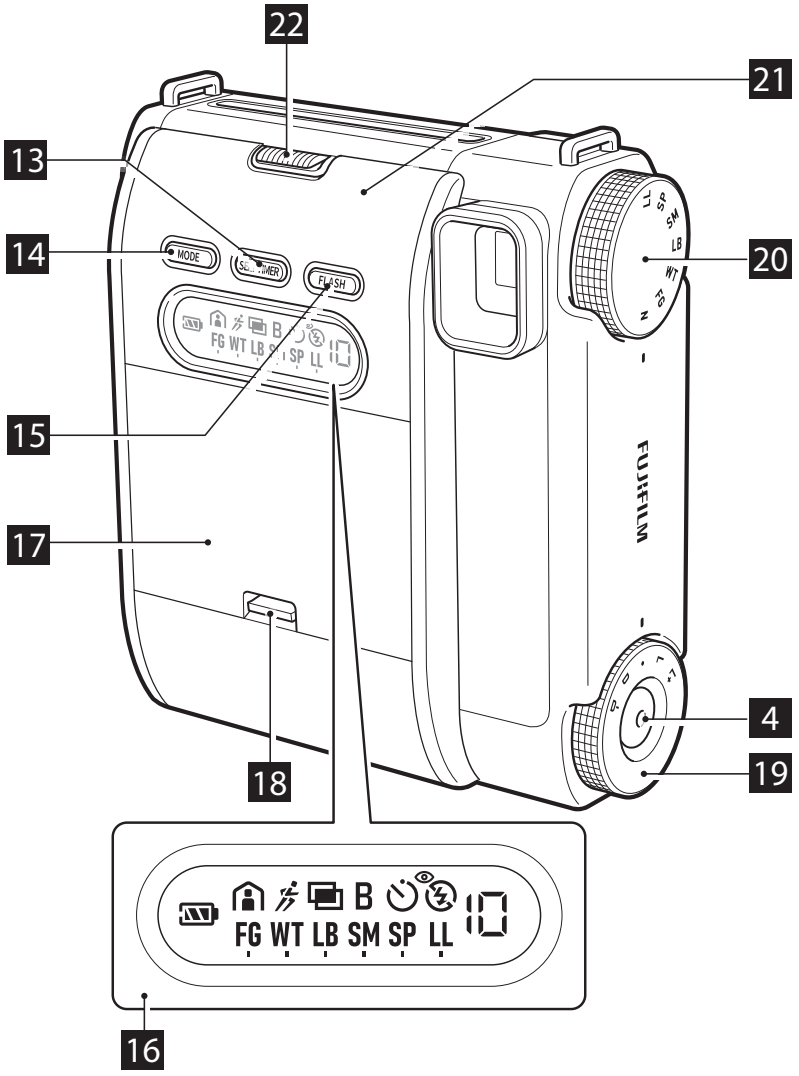

1 Film ejection slot

The exposed film is ejected from the film ejection slot during printing.

2 Shoulder strap hook

Pass the cord on the strap through the shoulder strap hook to attach it to the camera.

3 Flash

The flash operates depending on the setting.

4 Shutter button

Press the shutter button to take a photo.

5 Viewfinder

This is a viewing window to check your composition before shooting. When looking through the viewfinder, place the ◯ mark seen in the viewfinder over the center of your subject for best results.

6 Self-timer lamp

The self-timer lamp blinks when you take a photo using the self-timer.

7 Lens/Lens cover

A camera lens. When taking pictures, make sure that your fingers do not touch the lens.

8 Tripod mount

You can attach a tripod by using this threaded hole.

9 Manual vignette switch

This is a switch to use vignette mode. It can be switched ON/OFF. For details, refer to page 13.

10 Flash light sensor

The sensor that detects the brightness of the flash.

11 AE light sensor

The sensor that detects the surrounding brightness.

12 Lens dial

Turn the lens dial to turn on the power. You can set it to landscape mode or macro mode depending on the focal length.

13 Self-timer button

Press the self-timer button once, then the self-timer icon will be displayed on the mode indicator. When you press the shutter button in this state, the self-timer lamp lights up for about 7 seconds, then flashes for about 3 seconds before the photo is taken.

14 MODE button

You can change the shooting mode. Each time you press the MODE button from "Normal (No display)", the mode changes as follows: "Indoor" → "Sports" → "Double exposure" → "Bulb".

15 Flash button

You can select flash functions. Each time you press the flash button from "No display (Auto)", the mode changes from "Fill-in flash" → "Red-eye removal" → "Flash off".

16 Mode indicator

Icons will be displayed depending on the operation.

17 Battery cover

This is the cover to take the battery in and out. The battery must be fully charged before loading the film pack.

18 Battery cover lock

Open the cover by pulling up on the knob.

19 Brightness control dial

By turning the dial, You can adjust the brightness in 5 levels.

20 Color effect dial

By turning the dial, you can select from 6 different color effects.

21 Film door

This is the door for loading and unloading film packs.

22 Film door lock

This is a fastener that prevents the film door from opening. Slide the film door lock to unlock the film door so that it can be lifted open.

Charging the Battery

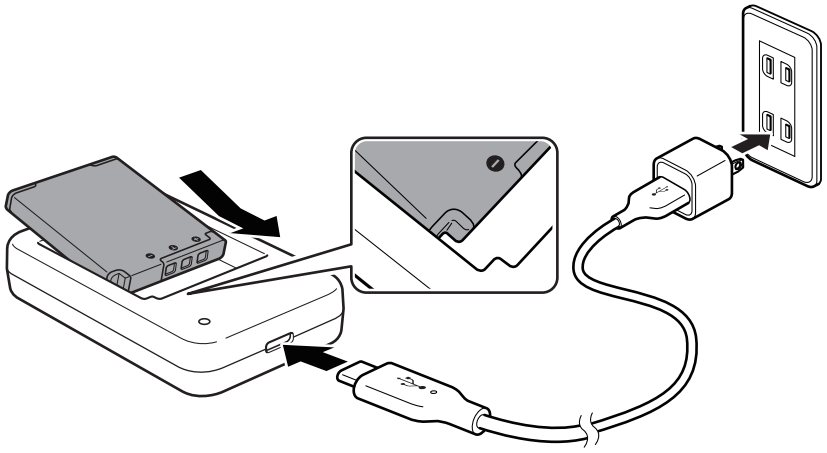

1 Attach the battery to the charger.
Check the orientation of the battery and install it according to the shape of the charger.

2 Connect the charger, USB Type-C cable, and conversion adapter as shown.
Once connected, charging will begin.
* Conversion adapter is sold separately.

- Charging time is approximately 1 to 2 hours.
- When charging begins, the round lamp on the charger lights up.
  Charging time may take longer at low or high temperatures.
- The power delivered by the charger must be between min 0.4 Watts required by the radio equipment, and max 2.5 Watts in order to achieve the maximum charging speed.

■ Charging Status Indication

While charging	The LED will light orange.
Charging finished	The LED will light green.
Charging error	The LED will flash orange.

Inserting the Battery

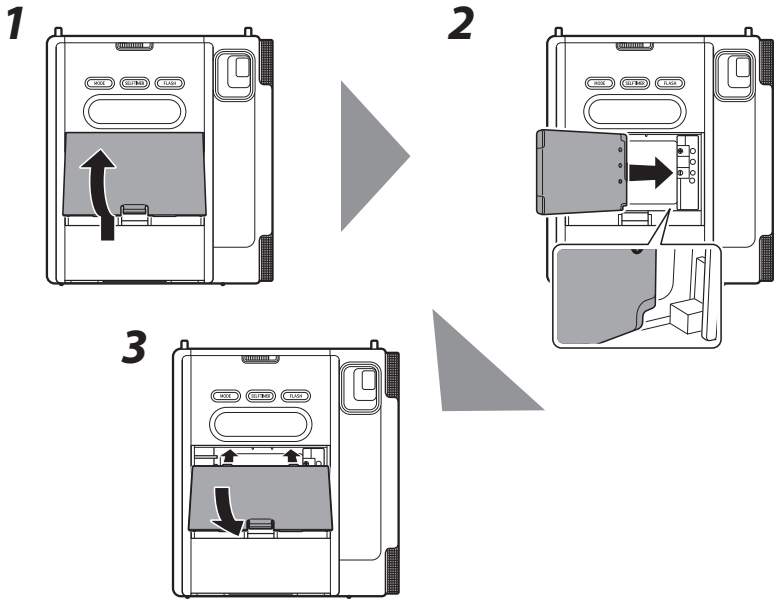

Push up on the battery cover lock and remove the battery cover. Align the battery, the shape of the camera, and the position of the terminals, fit the battery in by sliding it from left to right, and close the lid.

Checking the Battery Level

You can check the remaining battery power with the battery icon on the mode indicator.

Battery Icon	Battery status
	Battery is fully charged.
	Battery capacity is getting low.
	Battery capacity is low.
(Flashing)	No battery capacity remains.

Taking Pictures

1

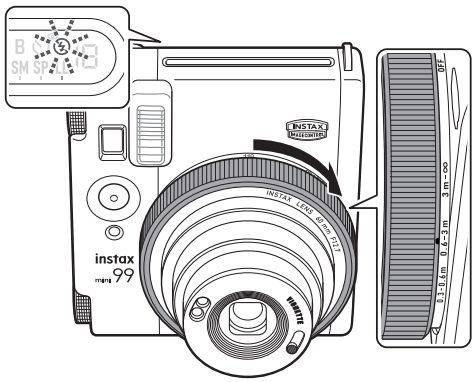

Turn the lens dial to turn on the power. Battery, film counter, and (if set) color effects will light up on the display.
*Flash icon (show above) will blink. While it is blinking, the flash is charging and unable to shoot.

2

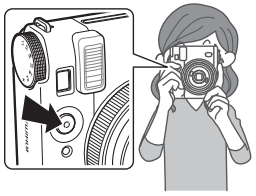

For vertical shooting, use the shutter button on the front of the camera.

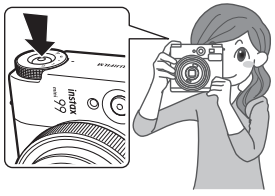

For horizontal shooting, use the shutter button on the side of the camera.

Confirm the composition and press the shutter button.

3

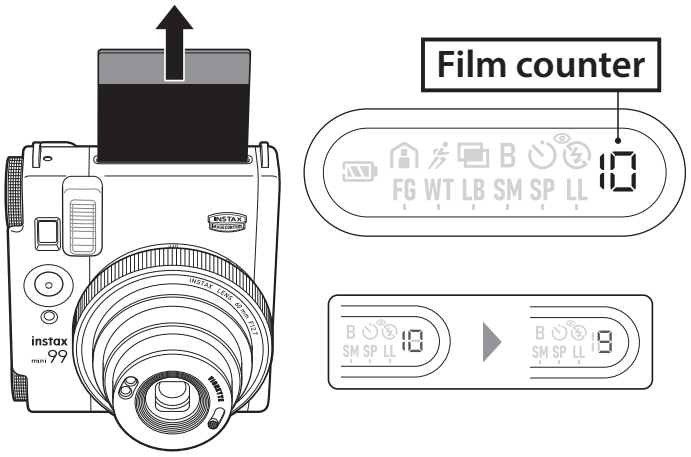

The number on the film counter in the mode indicator decreases from "10" and the number of remaining shots is displayed, and when the film pack is used up, "0" is displayed.

4

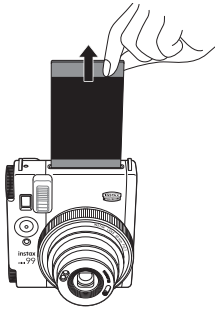

- The developing time is approximately 90 seconds. (The time varies depending on the ambient temperature.)

After the sound of the film ejecting stops, hold the tip of the ejected film and take it out.

- Take care that the shoulder strap and/or fingers do not cover the flash light sensor, AE light sensor, flash lampface, lens, or film ejection slot.
- When looking through the viewfinder, look from the front so that the ◯ mark in the viewfinder is visible in the center of your subject.
- Viewfinder shading in macro mode does not affect shooting.

Shooting according to the subject

Shooting in Standard, Landscape, and Macro modes

You can change the shooting mode by turning the lens dial.
Transition : Landscape → Standard → Macro.

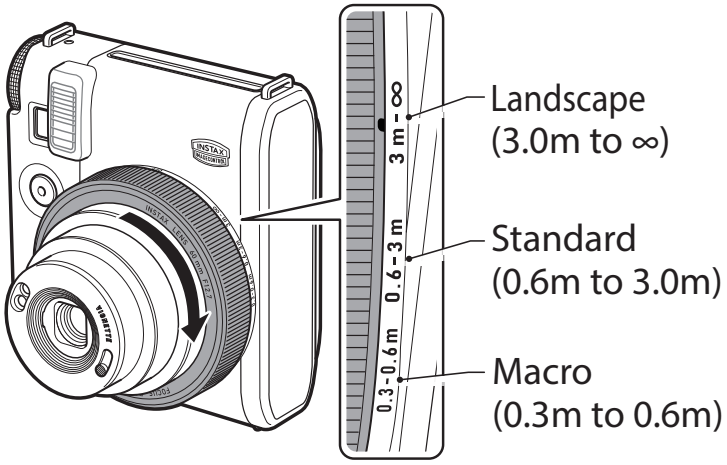

Using the Self-Timer

Take pictures using the self-timer.

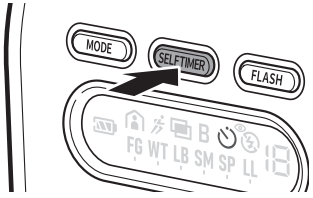

1 Press the self-timer button once.
Self-timer lamp lights up.
*The self-timer icon will not be displayed if no film pack is inserted.

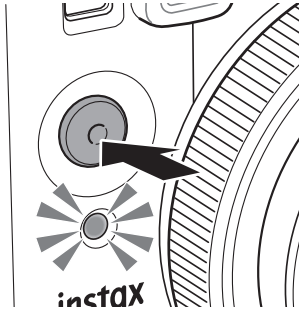

2 If you press the shutter button, the self-timer lamp is lit for about 7 seconds. After that, the lamp flashes about 3 seconds and then the photo is taken.

Taking Pictures Using the Flash

You can select flash functions according to the purpose.
Press the flash button to select the function to use.

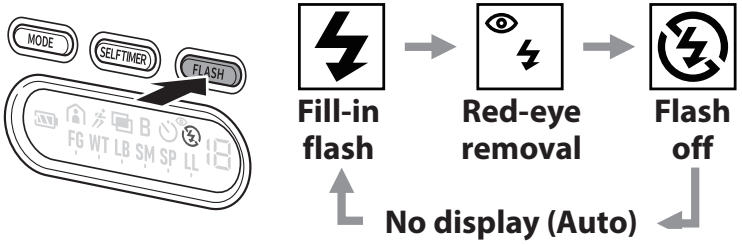

■ **About Flash Functions**

No Display (Auto)
Automatically adjusts flash usage and brightness depending on the shooting environment.

Fill-in flash
Select when you want to use a flash regardless of the brightness. The subject is photographed sharply with backlighting.

Red-eye removal
Select when you want to minimize a Red-eye effect. The flash fires 3 times (pre-flashing) before shooting.

Flash off
Use this when shooting in places where the use of flash is prohibited or when you want to shoot without using a flash.
- When is flashing, be careful not to blur your shots.
- Depending on the lighting, the photo may appear blue-green or reddish, or may not have the appropriate brightness.

Using Various Settings

How to Select the Shooting Mode

Press the MODE button.
The selected shooting mode icon lights up.

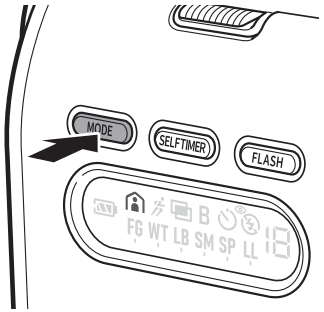

Each time you press the MODE button, the shooting mode changes as follows.

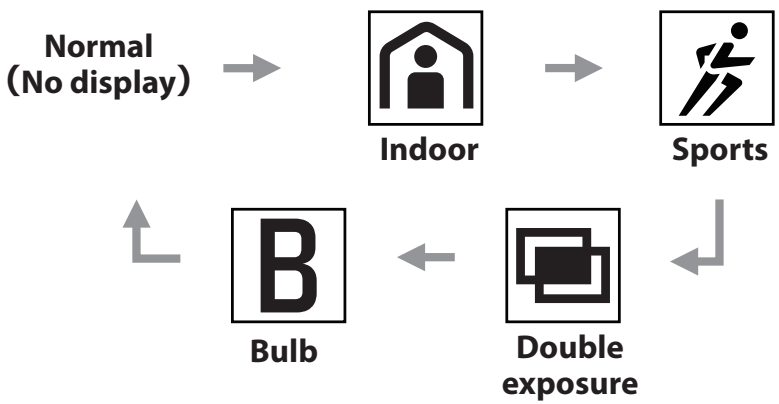

- The setting is retained after the shutter button is pressed.
- Switching off the camera returns it to Normal (No display).

■ About Shooting Functions

No Display **Normal**

This is used for normal shooting.
The flash fires or the shutter speed varies automatically according to the brightness.

Indoor

Use a slow shutter speed to brighten the background in low-light environments.

Sports

Use this when you want to reduce blur in fast moving subjects.

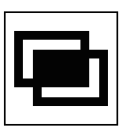

Double exposure

Two shots are combined into one photograph. When you shoot the first image, the icon flashes. After that, shoot the second image.

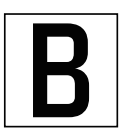

Bulb

The shutter is kept open while the shutter button is pressed (up to 10 seconds, maximum). Use when shooting a night view. Using a table or a tripod is necessary to steady the camera.

Adjusting the Brightness

You can change the brightness of the photo.
Turn the dial and select the brightness. You can select from L+ to D– including the normal setting.

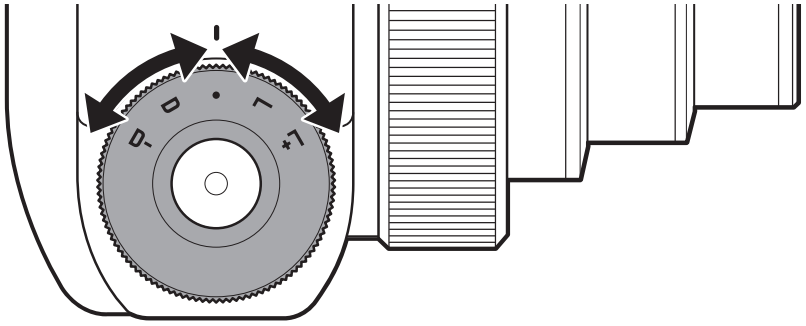

■ Setting the Brightness

L+ Lighter	The brightest picture will be taken. Select this when you want to make the image lighter (brighter) than when shooting in L mode.
L Lighten	The photo will be brighter than the 'normal' brightness level. Select "L" to lighten the picture if the picture is coming out too dark.
● Normal	Use this setting for consistently well-lit everyday images.
D Darken	The photo will be darker than the 'normal' brightness level. Select "D" to darken the picture if the picture is coming out too bright.
D– Darker	The darkest picture will be taken. Use this setting in cases where overexposure occurs.

Applying Various Effects to Photos

By applying color effects, you can create photos with various looks.Turn the dial to select from 6 different modes which uses the built-in LED lighting system.The selected effect will be displayed on the LCD.

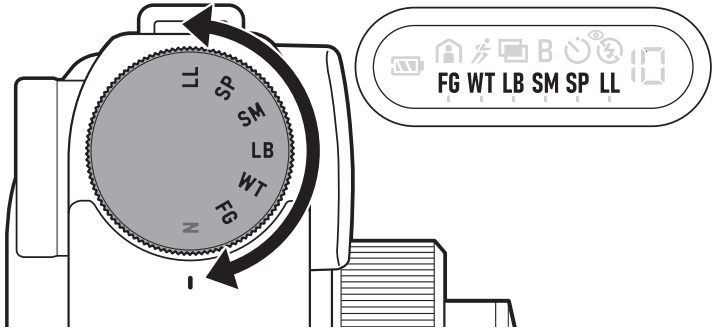

■ About the Mode

FG — Faded Green
Faded Green delivers a classic, filmic style to your photos.

WT — Warm Tone
Use this mode to add a sense of warmth & emotion.

LB — Light Blue
Light blue creates a gentle, light and refreshing atmosphere.

SM — Soft Magenta
Create soft looking images with a reddish hue.

SP — Sepia
Creates images with a yellow tint for a timeless look.

LL — Light Leak
Add a dramatic light bleed effect to your photos.

Depending on the shooting conditions, the built-in LED light effect may not extend to the four corners of the photo.

Shooting in Vignette Mode

The camera is equipped with a vignette mode that narrows the lens aperture and allows you to take photos with reduced peripheral light. You can take artistic photos that focus on the center of the image.

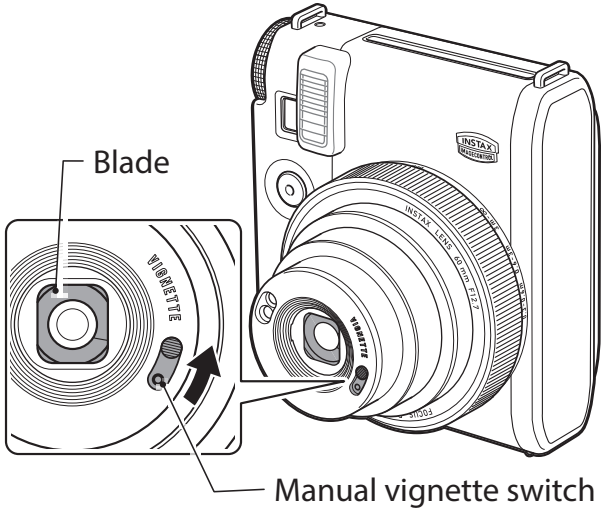

Vignette OFF

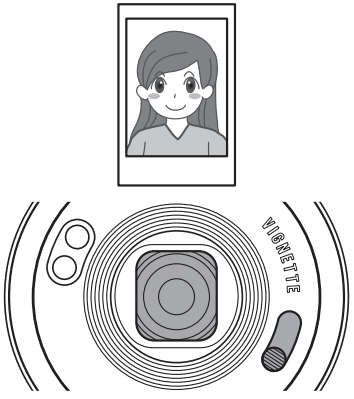

Vignette ON

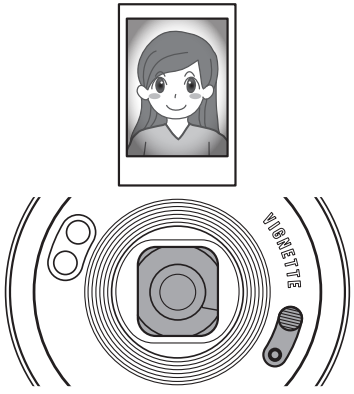

When you slide the "Manual vignette switch", the blades inside the lens will protrude. The vignette function will be applied by shooting as is.

* The Vignette mode may not produce a desirable effect in all shooting conditions.

Do not touch the blade inside the lens.

Available Functions according to Each Shooting Mode

The table below shows functions available in combination with each shooting mode.

■ **Standard (0.6m to 3.0m), Landscape (3.0m to ∞)**

✓: Selectable, ▒: Unselectable

	D-	D	•	L	L+	⚡	⚡ *2	⚡	⏱	Color effect
Default*1	✓	✓	✓	✓	✓	✓	✓	✓	✓	✓
	✓	✓	✓	✓	✓	✓	✓		✓	✓
	✓	✓	✓	✓	✓	✓	✓		✓	✓
	✓	✓	✓	✓	✓	✓	✓	✓	✓	✓*4
B *5	✓*7	✓*7	✓*6	✓*7	✓*7	✓	✓	✓*8		✓

■ **Macro (0.3m to 0.6m)**

	D-	D	•	L	L+	⚡	⚡ *2	⚡	⏱	Color effect
Default*1	✓	✓	✓	✓	*3	✓	✓	✓	✓	✓
	✓	✓	✓	✓	*3	✓	✓	✓	✓	✓*4
B *5	✓*7	✓*7	✓*6	✓*7	*3	✓	✓	✓*8		✓

*1 "Default" means normal mode (No display).
*2 The flash fires regardless of the brightness.
*3 It becomes L mode, when the macro mode is selected.
*4 In a double exposure, the color effect LEDs will only light up once, either during the first or second exposure.
*5 Automatic flash cannot be selected in bulb mode.
*6 Flash off, Fill-in flash and Red-eye removal are available.
*7 Fill-in flash and Red-eye removal are available.
*8 "Flash off" can be set only when the brightness is normal (•).

Precautions for Taking Photos

Precautions for Holding the Camera

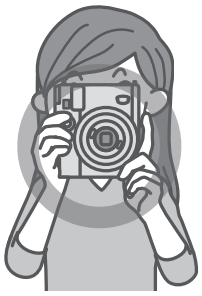

Correct way to hold

Do not cover the flash light sensor and AE light sensor with a finger

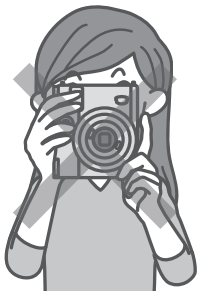

Do not cover the flash lampface with a finger

- Take care that the shoulder strap and/or fingers do not cover the flash light sensor, AE light sensor, flash lampface, lens, or film ejection slot.
- Hold the camera so that the flash lampface is at the top when taking a horizontal picture.
- Do not take pictures in locations where flash photography is forbidden.
- Do not grasp the lens barrel when holding the camera. The finished photos may be adversely affected.
- When looking through the viewfinder, look from the front so that the ◯ mark in the viewfinder is visible in the center of your subject.
- Be careful not to touch the lens when you press the shutter button.
- When taking photos in the dark, hold the camera firmly to prevent blurring, as the shutter speed may be slow.

Distances for Shooting

- In normal mode, take a picture at a distance of at least 0.6 m from the subject. The effective flash range is up to approximately 2.7 m.

Self-timer lamp status and error solutions

Self timer lamp status	Description
Self-timer light on (7 sec) → Self-timer light blinks (3 sec)	The self-timer is set and will notify you when it will take a photo.
Self-timer lamp flashes The film counter display on the LCD flashes E.	An error has occurred. • Film is jammed. • Lens dial position is incorrect. • Other errors
Self-timer lamp flashes Battery level display flashes.	Battery temperature is abnormal. • The film counter display on the LCD flashes L: Low temperature abnormality • The film counter display on the LCD flashes H: High temperature abnormality

Troubleshooting

Main errors	Causes and solutions
Battery icon on the LCD flashes.	Battery voltage is insufficient. Charge the battery.
Film jamming	Do not pull out the film by force; remove the battery, charge the battery, and then reinstall it. You may be able to eject the film.

Battery and Charger FAQ	Causes and solutions
The battery drains too fast.	• Are the battery terminals dirty? Wipe the battery terminals with a clean, dry cloth. • Have you been using the same battery for a long time? The battery may be at the end of its lifespan. Please replace the battery with a new one.
Charging does not start.	Are the charger, cable, and battery connected correctly? Please check before charging.
Charging takes time.	Are you charging in a very cold or hot place? Charging time may take longer at low or high temperatures.
The charging lamp blinks during charging and charging is not possible.	Is the battery temperature too high or low? Wait until the battery temperature stabilizes before charging again.

IMPORTANT SAFETY NOTICE

- **Do not use this product and its accessories for a purpose other than taking photos.**
- **This product has been designed with safety in mind, but please read the following safety precautions carefully and then use the product correctly.**
- **After reading this User's Guide, be sure to keep it in an easy-to-access place where you can refer to it whenever necessary.**

⚠ WARNING

This symbol indicates danger, which could result in injury or death. Please follow these instructions.

⚠ CAUTION

This indicates a matter that may lead to injury or physical damage if ignored or incorrectly handled. Please follow these instructions.

⚠ WARNING

⚠ Never attempt to take this product apart. Electric shock may occur.

⚠ Do not touch this product if the inside of it becomes exposed due to dropping, etc. This product has high-voltage circuitry that may cause injury or electric shock.

⚠ If you notice anything abnormal, such as the camera (battery) becoming hot, emitting smoke, or making a burning smell, remove the battery immediately. Fire or burns may occur (be careful not to burn yourself when removing the battery).

⚠ Never take flash photographs of people riding bicycles, driving cars, running trains and the like. Traffic accident may occur.

⚠ If you drop the camera in water or if water or a piece of metal or other foreign object gets inside, remove the battery immediately. Heat generation or fire may occur.

⚠ Do not use this camera in places where there is flammable gas or near gasoline, benzine, paint thinner or other unstable substances which can give off dangerous vapors. Failure to do this could result in explosion or fire.
⚠ Keep the product out of the reach of infants and small children. Injury may occur.
⚠ Do not disassemble, heat the battery, throw them in a fire, or put them in an electrical short circuit. The battery may rupture.
⚠ Do not use the battery except as specified. Heat generation or fire may occur if other battery are used.
⚠ Keep battery out of the reach of infants. An infant may accidentally swallow a battery. In the event that a battery is swallowed, seek medical attention immediately.

⚠ CAUTION

⚠ If the camera is not functioning correctly, to avoid injury do not attempt to repair yourself.
⚠ Do not touch any parts within the inside of the back cover. This may cause injury or malfunction.
⚠ Do not handle this product with wet hands. Electric shock may occur.
⚠ Keep the product out of the reach of infants and small children. Injury may occur.
⚠ Do not cover or wrap the camera in a cloth or blanket. This can cause heat to build up and distort the casing or cause a fire.
⚠ Using a flash too close to persons' eyes may for the short term affect their eyesight. Take care when taking pictures of infants and young children.
⚠ Make sure that the battery ⊕ and ⊖ polarities are correct. A damaged battery or electrolyte leakage may cause a fire, injury, and contaminate the environment.
⚠ Do not touch moving parts inside the camera. You may be injured.

CE	The "CE" mark certifies that this product satisfies the requirements of the European Union (EU) regarding safety, public health, environment, and consumer protection. ("CE" is the abbreviation of Conformité Européenne.)
UK CA	The "UKCA" mark certifies that this product satisfies the requirements of Great Britain (England, Scotland, Wales) regarding safety, public health, environment and consumer protection. *UKCA: UK Conformity Assessed.

■ **Legally required regulation compliance displays are located on the inside of the back cover of the camera.**

Handling

Handling of the Camera

1. The camera is a precision instrument, so do not get it wet, drop it, or subject it to shock. Also, do not place the camera where it will be exposed to sand or grit.
2. Do not use solvent such as paint thinner or alcohol to wipe off dirt.
3. Any dirt or dust in the film chamber will affect the finish of the print. Do not allow the film chamber to get dirty or dusty.
4. Do not leave the camera in a closed motor vehicle, another hot place, a humid place, on the beach, etc. for a long period of time.
5. Gas containing moth repellent may adversely affect the camera and film. Avoid keeping the camera and film in a chest of drawers, etc. with mothballs.
6. The operating temperature range of this camera is +5°C to +40°C.
7. When taking photos, please be careful not to violate the rights of others, such as copyright, image rights, and privacy, or violate public order. Any act that violates the rights of others, or is contrary to public order or morals, or constitutes a nuisance, is subject to legal penalties and claims for damages.
8. This camera is for general household use. It is not suitable for commercial photography and other applications where a large number of prints are used.
9. Before using a commercially available strap, check the strength of the strap. Be especially careful when using a strap for mobile phones and smartphones because such straps are made for lightweight devices.
10. If you are not using your camera for a long interval, unload the battery and keep it where it will avoidmoisture, heat and dust.
11. Remove soil and dust from the viewfinder window, etc. with an air blower and by wiping gently with a piece of soft cloth.

Cautions During Printing

Handling of INSTAX mini Film and Photos

For details on the handling of film and photos, see the instructions written on the FUJIFILM Instant Film "INSTAX mini" packaging.

1. Keep film in a cool place. In particular, do not leave film in an extremely hot place, such as in a closed motor vehicle, for a long period of time.
2. Do not make a hole in film or tear or cut film. Do not use damaged film.
3. Use film as soon as possible after inserting it in the camera.
4. If film has been kept in a place where the temperature is extremely low or high, allow it to become accustomed to a normal temperature before taking pictures.
5. Use film before the film expiration date referenced on the packaging.
6. Avoid checked luggage inspection at the airport and other strong X-ray exposure. Unused film is susceptible to the effect of fogging, etc. We recommend that you carry film onto aircraft in carry-on luggage (check with the relevant airport for more information).
7. Avoid exposing photos to strong light, and store them in a cool and dry place.
8. Do not cut or disassemble the INSTAX mini Film as it contains black caustic alkali paste. Be especially careful not to let infants or pets put the film into their mouths. Also take care that the paste does not come into contact with skin and clothes.
9. If you accidentally touch the paste of unused film, immediately wash it off with plenty of water. If the paste comes into contact with the eyes or mouth, wash the area and then seek medical attention. The

alkalinity of this film will weaken approximately 10 minutes after the photo is ejected from the camera.

10. Do not store photos in a sealed bag, as this may cause discoloration.
11. Do not touch the image during development time.

■ **Cautions on handling film and finished photos**
For details, see the instructions on the FUJIFILM Instant Film "INSTAX mini" packaging.

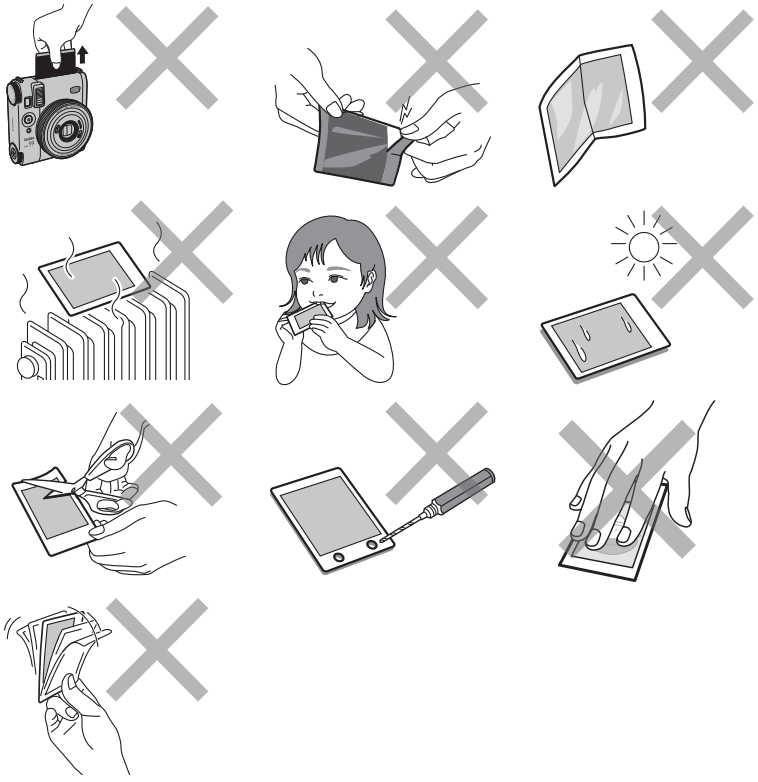

Handling the Battery

EN

⚠ WARNING

This symbol indicates danger, which could result in injury or death. Please follow these instructions.

⚠ Do not use the battery except as specified. Load the battery as shown by the indicator.

⚠ Do not heat, change or take apart the battery. Do not drop or subject the battery to impacts. Do not shortcircuit the battery. Do not store the battery with metallic products. Do not charge the battery using a charger other than a specified one. Any of these actions can cause the battery to burst or leak and cause fire or injury as a result.

⚠ Do not use voltages other than the power supply voltage shown. The use of other power sources can cause a fire.

⚠ If the battery leaks and fluid gets in contact with your eyes, skin or clothing, flush the affected area with clean water and seek medical attention or call an emergency number right away.

⚠ Risk of explosion if battery is replaced by an incorrect type. Dispose of used battery according to the instructions.

⚠ Dispose of used battery according to the instructions. When discarding, cover the battery terminals with insulation tape. Contact with other metallic objects or battery could cause the battery to ignite or burst.

⚠ When you are cleaning the camera or you do not plan to use the camera for an extended period, remove the battery. Failure to do so can cause a fire or electric shock.

⚠ If a problem arises, turn the camera off and remove the battery. Continued use of the camera when it is emitting smoke, is emitting any unusual odor, or is in any other abnormal state can cause a fire or electric shock. Contact your FUJIFILM dealer.

⚠ Do not disassemble, heat the battery, throw them in a fire, or put them in an electrical short circuit. The battery may rupture.

⚠ Do not use the battery except as specified. Heat generation or fire may occur if other battery are used.

⚠ Keep battery out of the reach of infants. An infant may accidentally swallow a battery. In the event that a battery is swallowed, seek medical attention immediately.

⚠ Make sure that the battery ⊕ and ⊖ polarities are correct. A damaged battery or electrolyte leakage may cause a fire, injury, and contaminate the environment.

The Battery

The following describes the proper use of battery and how to prolong its life. Incorrect use can shorten battery life or cause leakage, overheating, fire, or explosion.
The battery is not charged at shipment. Charge the battery completely before use.

■ Notes on the Battery

The battery gradually loses its charge when not in use. Charge the battery one or two days before use.
Battery life can be extended by turning the camera off when not in use.
Battery capacity decreases at low temperatures; a depleted battery may not function at when cold. Keep a fully charged spare battery in a warm place and exchange as necessary, or keep the battery in warm place and insert it in the camera only when shooting. Do not place the battery in direct contact with hand warmers or other heating devices.

■ Charging the Battery

Charge the battery using the supplied USB cable. Charging times will increase at ambient temperatures below +10 °C (+50 °F) or above +35 °C (+95 °F). Do not attempt to charge the battery at temperatures above +40 °C (+104 °F); at temperatures below +5 °C (+41 °F), the battery will not charge.
Do not attempt to recharge a fully charged battery. The battery does not however need to be fully discharged before charging.
The battery may be warm to the touch immediately after charging or use. This is normal.

■ Battery Life

At normal temperatures, the battery can be recharged about 300 times. A noticeable decrease in the length of time the battery will hold a charge indicates that it has reached the end of its service life and should be replaced.

■ Storage

Performance may be impaired if the battery is left unused for extended periods when fully charged. Deplete the battery fully before storing it.
If the camera will not be used for an extended period, remove the battery and store it in a dry place with an ambient temperature of from +15 °C to +25 °C (+59 °F to +77 °F). Do not store in locations exposed to extremes of temperature.

■ Cautions: Handling the Battery

- Do not affix stickers or other objects to the battery.
- Do not tear or peel off the external label.
- Keep the terminals clean.
- The battery and camera body may become warm to the touch after extended use. This is normal.

Notes on Disposing of the Camera

The battery used in this camera can be recycled.
Please do not dispose of it together with general waste.

Disposal of Electrical and Electronic Equipment in Private Households
Disposal of used Electrical & Electronic Equipment
(Applicable in the European Union and other European countries with separate collection systems)

This symbol on the product, or in the manual and in the warranty, and/or on its packaging indicates that this product should not be treated as household waste. Instead it should be taken to an appropriate collection point for the recycling of electrical and electronic equipment.
By ensuring this product is disposed of correctly, you will help prevent potential negative consequences to the environment and human health, which could otherwise be caused by inappropriate waste handling of this product.
The recycling of materials will help to conserve natural resources. For more detailed information about recycling of this product, please contact your local city office, your household waste disposal service or the shop where you purchased the product.
In Countries outside of EU: If you wish to discard this product, please contact your local authorities and ask for the correct method of disposal.

This Symbol on the battery or accumulators indicates that those battery should not be treated as household waste.

For customers in Turkey:

EEE Complies with Directive.

Specifications

EN

Film used	FUJIFILM Instant Film INSTAX mini
Photo picture size	62 mm × 46 mm
Lens	Retractable lens, 2 components, 2 elements, f = 60 mm, 1:12.7
Viewfinder	Real image finder, 0.37×, with target spot Features parallax correction function for Macro Mode
Shooting range	Manual 3-point switching type (0.3m to 0.6m/0.6m to 3.0m/3.0m to ∞) Shooting range: 0.3m to ∞
Shutter	Programmed electronic shutter 1.8 to 1/400 seconds. Bulb mode (opening time max. 10 seconds) Shutter button (vertical shooting/ horizontal shooting)
Exposure control	Automatic: LV 5.0 to 14.8 (ISO 800) Exposure compensation (shading control): –5/3EV, –2/3EV, +2/3EV, +1EV
Film ejection	Automatic
Film developing time	Approx. 90 seconds (varies depending on the ambient temperature)

Flash	Automatic flash (automatic light adjustment) Indoor mode (slow synchro flash), Fill-in flash, Flash off, Red-eye removal, Charging time: within 6.5 seconds (when using a fully-charged battery), Effective flash range: 0.3 m to 2.7 m
Power supply	Battery NP-70S (1 piece), capacity: approx. 10 INSTAX mini film packs (depends on usage conditions)
Auto power off time	After 5 minutes
Self-timer	Electronic operating time: approximately 10 seconds
LCD	LCD display shooting modes (Indoor, Sports, Double exposure, Bulb) Flash control mode Self-timer mode Battery level Color effect Film counter (remaining number of shots left)
Other	Tripod mount, Manual Vignette Switch
Dimensions	103.5 mm × 117.5 mm × 60.0 mm (excluding protrusions)
Weight	340 g (without battery, shoulder strap, and film)

Rechargeable battery NP-70S

Nominal voltage	DC 3.6V
Nominal capacity	680mAh
Operating temperature	+5°C to +40°C
External dimensions	34.5mm × 41.0mm × 5.5mm (width × height × thickness)
Weight	14.5g

Battery charger BC-70C

Rated input	DC 5.1V 530mA max
Rated output	DC 4.2V 550mA max
Compatible battery	FUJIFILM rechargeable battery NP-70S (lithium ion type)
Charging time	1 to 2 hours
Operating temperature	+5°C to +40°C
External dimensions	48mm × 76mm × 15mm (width × height × thickness)
Weight	Approx. 50g (body only)

Specifications and performance are subject to change without notice.

Information for traceability in Europe

Manufacturer: FUJIFILM Corporation
7-3, Akasaka 9-Chome, Minato-ku, Tokyo
Japan
Authorized representative in Europe:
FUJIFILM Europe GmbH
Balcke-Duerr-Allee 6, 40882 Ratingen
Germany
EU Importer : FUJIFILM Europe B.V.
Oudenstaart 1, 5047 TK Tilburg
The Netherlands
UK Importer : FUJIFILM UK Limited
Fujifilm House,Whitbread Way,
Bedford, Bedfordshire, MK42 0ZE
UK

[en] If you have any inquiries about this product, please contact a FUJIFILM authorized distributor, or visit the website below.

[de] Falls Sie Fragen zu diesem Produkt haben, beziehen Sie sich bitte auf die Details auf der beiliegenden Kundendienstkarte oder besuchen Sie die unten angegebene Website.

[fr] Si vous avez des questions sur ce produit, veuillez vous adresser à un distributeur Fujifilm agréé, ou consultez le site web ci-dessous.

[es] Si tuviera alguna pregunta sobre este producto, consulte la información en la tarjeta de servicio adjunta o visite el siguiente sitio web.

[zht] 如果您對本產品有任何疑問，請參閱隨附的服務卡上的詳情，或訪問以下網站。

[ko] 이 제품에 대해 문의가 있을 때에는, 동봉된 서비스 카드를 참조하시거나 아래의 웹 사이트를 방문하여 주십시오.

[pt] Caso tenha alguma questão acerca deste produto, por favor, contacte um distribuidor autorizado FUJIFILM, ou aceda ao website abaixo.

[ru] Если у Вас есть любые вопросы относительно этого изделия, обратитесь к авторизованному дистрибьютору FUJIFILM или посетите следующий веб-сайт.

[it] In caso di domande relative al prodotto, contattare un distributore autorizzato FUJIFILM o accedere al sito web riportato di seguito.

[nl] Als u vragen hebt over dit product, gelieve contact op te nemen met een geautoriseerde FUJIFILM-distributeur of ga naar de onderstaande website.

[pl] Jeśli masz jakieś pytania dotyczące tego produktu, skontaktuj się z autoryzowanym dystrybutorem FUJIFILM lub odwiedź witrynę internetową podaną poniżej.

[cs] Máte-li jakékoli dotazy týkající se tohoto výrobku, obraťte se prosím na autorizovaného distributora společnosti FUJIFILM nebo navštivte níže uvedené webové stránky.

[sk] Ak máte akékoľvek otázky týkajúce sa tohto výrobku, kontaktujte autorizovaného distribútora spoločnosti FUJIFILM, alebo si pozrite nižšie uvedenú webovú stránku.

[hu] A termékkel kapcsolatos bármely kérdésével kérjük, keresse fel a FUJIFILM egyik hivatalos forgalmazóját, vagy látogasson el az alábbi weboldalra.

[uk] Якщо маєте якісь запитання щодо цього виробу, будь ласка, зверніться до вповноваженого представника FUJIFILM або завітайте на сайт, указаний далі.

https://global.fujifilm.com/

FUJIFILM

FUJIFILM Corporation
7-3, AKASAKA 9-CHOME, MINATO-KU, TOKYO 107-0052, JAPAN