Scan the QR code to see the manual.

OWNER'S MANUAL

AIR CONDITIONER

In order to use the product safely and conveniently, please read the owner’s manual before using the product.

ENGLISH

TYPE : WINDOW (INVERTER)

MFL72020517
Rev.01_081926

www.lg.com

Copyright © 2025-2026 LG Electronics. All Rights Reserved

TABLE OF CONTENTS

This manual may contain images or content that may be different from the model you purchased.

This manual is subject to revision by the manufacturer.

SAFETY INSTRUCTIONS

READ ALL INSTRUCTIONS BEFORE USE 3
WARNING INSTRUCTIONS 4
CAUTION INSTRUCTIONS 9

INSTALLATION

Before Installation 11
Installing the Unit 14

OPERATION

Control Panel and Remote Control 18
Additional Features 23

SMART FUNCTIONS

LG ThinQ Application 24
Diagnosis Using LG ThinQ 26

MAINTENANCE

Cleaning 27

TROUBLESHOOTING

Before Calling for Service 29

APPENDIX

Information 32

SAFETY INSTRUCTIONS

READ ALL INSTRUCTIONS BEFORE USE

The following safety guidelines are intended to prevent unforeseen risks or damage from unsafe or incorrect operation of the appliance.

The guidelines are separated into 'WARNING' and 'CAUTION' as described below.

Safety Messages

Your safety and the safety of others are very important.

We have provided many important safety messages in this manual and on your appliance. Always read and follow all safety messages.

⚠ This is the safety alert symbol.
This symbol alerts you to potential hazards that can kill or injure you and others. All safety messages will follow the safety alert symbol and either the word WARNING or CAUTION.

These words mean:

⚠ **WARNING**
You may be killed or seriously injured if you do not follow instructions.

⚠ **CAUTION**
You may be injured or cause damage to the product if you do not follow instructions.

All safety messages will tell you what the potential hazard is, tell you how to reduce the chance of injury, and tell you what may happen if the instructions are not followed.

Notes for Flammable Refrigerant

The following symbols are displayed on units.

	This symbol indicates that this appliance uses a flammable refrigerant. If the refrigerant is leaked and exposed to an external ignition source, there is a risk of fire.
	This symbol indicates that the Owner's Manual should be read carefully.
	This symbol indicates that service personnel should be handling this equipment with reference to the Installation Manual.
	This symbol indicates that information is available in the Owner's Manual or Installation Manual.

WARNING INSTRUCTIONS

⚠ WARNING

- To reduce the risk of explosion, fire, death, electric shock, injury or scalding to persons when using this product, follow basic precautions, including the following:

Technical Safety

- This appliance is not intended for use by persons (including children) with reduced physical, sensory or mental capabilities, or lack of experience and knowledge, unless they have been given supervision or instruction concerning use of the appliance by a person responsible for their safety.
- Young children should be supervised to ensure that they do not play with the air conditioner.
- When the power cord is to be replaced, the replacement work must be performed by authorized personnel using only genuine replacement parts.

Installation

- Before use, the appliance must be properly installed as described in this manual.
- Contact an authorized service technician for repair or maintenance of this unit.
- Contact an installer for installation of this unit.
- The air conditioner is not intended for use by young children or invalids without supervision.
- Keep any required ventilation openings clear of obstruction.
- Compliance with national gas regulations shall be observed.
- Installation work must be performed in accordance with the National Electric Code by qualified and authorized personnel only.
- Connect to a properly rated, protected, and sized power circuit to avoid electrical overload.
- Always plug into a grounded outlet.
- Do not, under any circumstances, cut or remove the third (ground) prong from the power cord.
- When installing or moving the appliance, be careful not to pinch, crush, or damage the power cord.
- Plug in the power plug properly.
- Do not modify or extend the power cord.
- If the cord/plug is damaged, have it replaced by an authorized service person using authorized replacement parts.
- Do not turn on the circuit breaker or power under condition that front grille, cabinet, control box are removed or opened. Otherwise, it may cause fire, electric shock, explosion or death.
- Use a dedicated circuit.
- Do not disassemble or modify the product.
- Adhere to all industry recommended safety procedures including the use of long-sleeved gloves and safety glasses.
- Disconnect the power cord or circuit breaker before installing or servicing the appliance.

- Keep packaging materials out of the reach of children. These materials can pose a suffocation risk to children.
- Store and install the product where it will not be exposed to temperatures below freezing or exposed to outdoor weather conditions.
- Do not store or use gasoline or other flammable vapors and liquids in the vicinity of this or any other appliance.
- Do not install the unit in potentially explosive atmospheres.

Operation

- Do not start/stop operation by plugging/unplugging the power cord.
- Use this appliance only for its intended purpose.
- Never attempt to operate this appliance if it is damaged, malfunctioning, partially disassembled, or has missing or broken parts, including a damaged cord or plug.
- Do not run the power cord under carpets or mats where it could be stepped on and damaged.
- Keep the power cord out from under heavy objects like tables or chairs.
- Do not place the power cord near a heat source.
- Do not use an adaptor or plug the product into a shared outlet.
- Do not tamper with controls.
- If you detect a strange sound, a chemical or burning smell, or smoke coming from the appliance, unplug it immediately, and contact an LG Electronics Customer Information Center.
- Never unplug the appliance by pulling on the power cord. Always grip the plug firmly and pull straight out from the outlet.
- Do not grasp the power cord or touch the appliance controls with wet hands.
- If water enters the product, turn off the power at the main circuit, then unplug the product and call for service.
- If the product has been submerged, contact an LG Electronics Customer Information Center for instructions before resuming use.

- Unplug the product when unused for long periods.
- Unplug the product before cleaning.
- In the event of a gas leak (propane gas, etc.) do not operate this or any other appliance. Open a window or door to ventilate the area immediately.
- The interior of the product must only be cleaned by an authorized service center or a dealer.
- Do not use solvent-based detergent on the product. Doing so can cause corrosion or damage, product failure, electrical shock, or fire.

Grounding Instructions

- The power cord of this appliance is equipped with a three-prong (grounding) plug. Use this with a standard three-slot (grounding) wall power outlet to minimize the hazard of electric shock. Have the wall receptacle and circuit checked by a qualified electrician to make sure the receptacle is properly grounded. DO NOT CUT OR REMOVE THE THIRD (GROUND) PRONG FROM THE POWER PLUG.
  - Situations when the appliance will be disconnected occasionally: Because of potential safety hazards, we strongly discourage the use of an adapter plug.
- Attaching the adapter ground terminal to the wall receptacle cover screw does not ground the appliance unless the cover screw is metal, is not insulated, and the wall receptacle is grounded through the house wiring. The customer should have the circuit checked by a qualified electrician to make sure the receptacle is properly grounded.
- Disconnect the power cord from the adapter, using one hand on each.

  Otherwise, the adapter ground terminal might break. Do not use the appliance with a broken adapter plug.
  - Situations when the appliance will be disconnected often: Do not use an adapter plug in these situations. Unplugging the power cord frequently can lead to an eventual breakage of the ground terminal. The wall power outlet should be replaced by a three-slot (grounding) outlet instead.

Refrigerant (For R32 Only)

- Do not use means to accelerate the defrosting process or to clean, other than those recommended by the manufacturer.
- The appliance shall be stored in a room without continuously operating open flames (for example an operating gas appliance) and ignition sources (for example an operating electric heater).
- Do not pierce or burn. Be aware that flammable refrigerants may not contain an odour.
- The appliance shall be stored in a well-ventilated area where the room size corresponds to the room area as specified for operation.
- The appliance shall be stored so as to prevent mechanical damage from occurring.
- Do not use uncertified refrigerants.
- Any person who is involved with working on or breaking into a refrigerant circuit should hold a current valid certificate from an industry-accredited assessment authority, which authorises their competence to handle refrigerants safely in accordance with an industry recognised assessment specification.
- Servicing shall only be performed as recommended by the equipment manufacturer. Maintenance and repair requiring the assistance of other skilled personnel shall be carried out under the supervision of the person competent in the use of flammable refrigerants.

CAUTION INSTRUCTIONS

⚠ CAUTION

- To reduce the risk of minor injury to persons, malfunction, or damage to the product or property when using this product, follow basic precautions, including the following:

Installation

- Take care when installing the product that exhaust or condensation does not damage nearby property.
- Follow installation instructions exactly to avoid excessive vibration or water leakage.
- Do not install the appliance in an area where it is directly exposed to sea air (salt spray).
  - Saline conditions are a cause of corrosion. (Particularly, corrosion of the condenser and evaporator can damage the appliance or impair its performance.)
- Set up windbreak in front of the outdoor unit if installing it in coastal areas.
  - Avoid direct exposure to salt winds.
  - Install a firm and stiff concrete-wind shield that can withstand salt winds.
- Wear gloves and use caution when unpacking and installing the appliance. Screws or sharp edges can cause injuries.

Operation

- This appliance is not intended for use as a precision refrigeration system. Do not use it for special purposes such as maintaining pets, food, precision machinery, or art objects.
- Make sure the air inlet and outlet are free from obstructions.
- Do not step on or place heavy objects on top of the appliance.
- Do not operate the appliance without the filter securely installed.
- Do not drink water drained from the appliance.

- Be sure to ventilate sufficiently when the air conditioner and a heating appliance such as a heater are used simultaneously.
- Being exposed to direct airflow for an extended period of time could be hazardous to your health.
- Do not expose people, animals, or plants to the cold or hot wind from the air conditioner for extended periods of time.
- Remove the batteries if the remote control is not to be used for an extended period of time.
- Never mix different types of batteries, or old and new batteries in the remote control.
- Stop using the remote control if there is fluid leaking from the battery. If your clothes or skin are exposed to the leaking battery fluid, wash it off with clean water.
- If the leaking battery fluid has been swallowed, rinse the inside of the mouth thoroughly and consult a doctor.
- Do not recharge or disassemble the batteries.

Maintenance

- Clean the filter every two weeks.
- Never touch the metal parts of the air conditioner when removing the air filter.
- Never use strong cleaning agents or solvents or spray water when cleaning the air conditioner. Use a soft cloth.
- Use a soft cloth to clean the appliance. Do not use waxes, thinners, or harsh detergents.

NOTE

- Maximum cooling capacity declared on MRP/quality Label is as per our internal test report and not applicable for BEE star rating.

INSTALLATION

Before Installation

Product Overviews

Exterior Parts

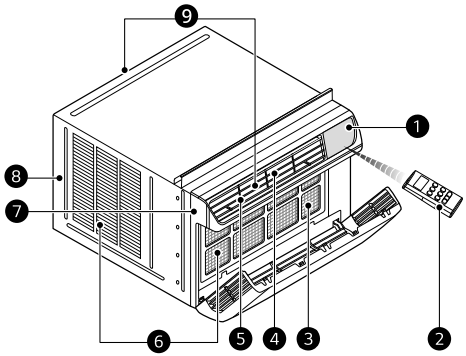

Interior Parts

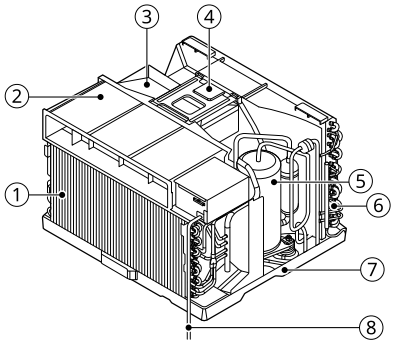

❶ Control Panel

❷ Remote Control

❸ Air Filter

❹ Vertical Air Deflector (Horizontal Louver)

❺ Horizontal Air Deflector (Vertical Louver)

❻ Air Inlet

❼ Front Grille

❽ Cabinet

❾ Air Outlet

① Evaporator

② Air Guide

③ Control Box

④ Brace

⑤ Compressor

⑥ Condenser

⑦ Base Pan

⑧ Power Cord

Circuit Breaker Installation

Read thoroughly and follow all directions provided.

A circuit breaker must be installed between the power source and the unit if the plug is not used (see illustration below).

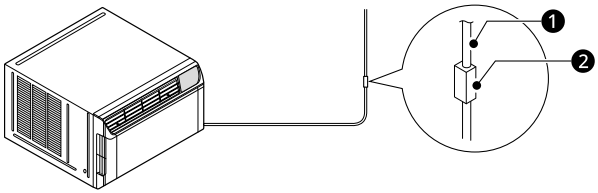

❶ Main Power source

❷ Circuit Breaker

- Use a circuit breaker or time delay fuse.

NOTE

- Use 15 A circuit breaker.

Installation Overview

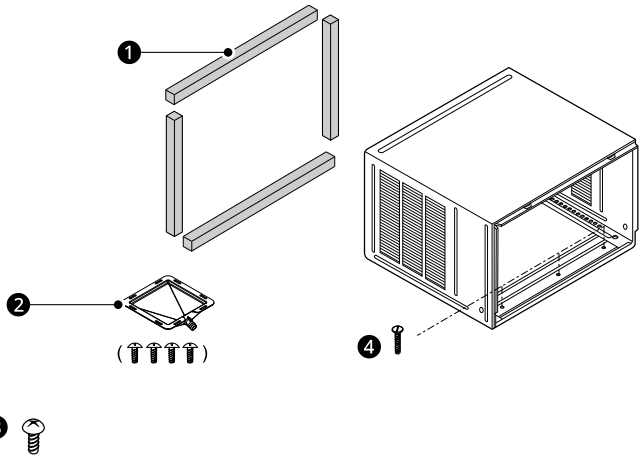

❶ Foam

❷ Drain pan

❸ Screw (For Front Grille, L: 10 mm, 2EA)

❹ Screw (L : 30 mm, 3EA)

Tools Needed

Phillips-head screwdriver

Flat-blade screwdriver

Pencil

Level

Tape measure

Cutting knife

Scissors

Installing the Unit

How to Install the Unit

1 Measure the space for installation to assure a good fit. The air conditioner must be installed firmly into place to prevent vibration and noise.

2 Avoid exposure to direct sunlight.

3 Remove all obstacles from the rear of the unit. There must be at least 50 cm (20 in.) of cleared space around the rear of the unit. Obstacles restricting the airflow may reduce the cooling efficiency of the unit.

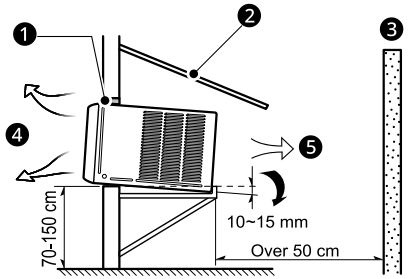

❶ Foam

❷ Awning

❸ Fence

❹ Cooled air

❺ Heat radiation

4 The unit should be installed with a slight tilt towards the outside to allow condensed water to drain. (About 10 mm ~ 15 mm or 1/4 bubble with Level)

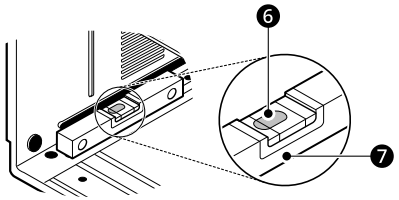

❻ 1/4 Bubble

❼ Level

⚠ CAUTION

- The external grille must be exposed outside for air discharge.

Preparation of the Cabinet

1 Remove 4 screws which fasten the cabinet at both sides and at the back.
- Keep the screws for later use.

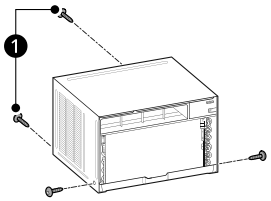

❶ Screws

2 Slide the unit from the cabinet by gripping the base pan handle and pulling forward while bracing the cabinet.

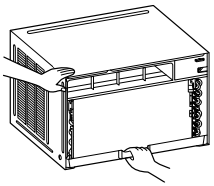

⚠ CAUTION

- The product is heavy. To prevent injury, use proper lifting techniques when pulling product forward from cabinet. Obtain assistance from another person if possible.

Drainage (On Some Models)

The base-pan may overflow due to high humidity. To drain the excess water, remove the drain cap

from the base pan of the unit and secure the Drain Pan.

1 Remove the rubber cap from the hole under the base-pan.

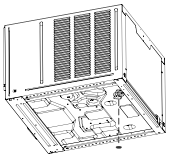

2 Install the drain pan over the corner of the cabinet with 2 - 4 screws.
- Drain pan can be install in 4 directions.

3 Connect the drain hose to the outlet located on the bottom of the drain pan.
- You can purchase the drain hose or tubing locally to satisfy your particular needs. Drain hose is not supplied.

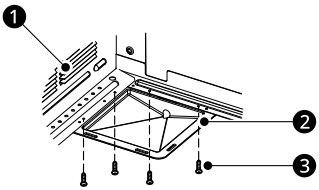

❶ Cabinet

❷ Drain Pan

❸ Screw

Installation of the Cabinet

1 Prepare the hole in the wall so that the bottom of the cabinet is well supported, the top has minimum clearace and the air inlet louveres have clearance as shown. Holes from the outside through to the cavity should be sealed. The cabinet should slope down towards the rear by about 10 mm ~ 15 mm to allow water formed during operation to drain.

2 Install the cabinet into the wall and secure. Ensure the foam seals are not damaged. Flash, seal or fill gaps around the inside and outside to provide satisfactory appearance and protection against the weather, insects and rodents.

NOTE

- Unit may be supported by a solid frame from below or by a hanger from a solid overhead support.

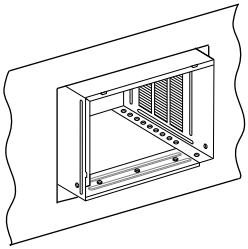

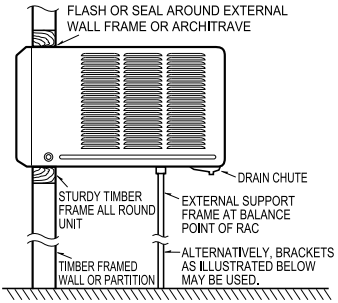

Preferred method of installation into a timber framed wall, partition or window.

Space for Outside Air Flow

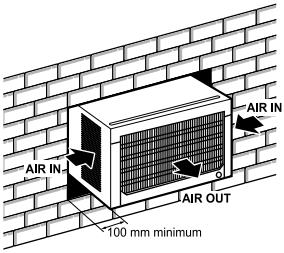

OPTION A

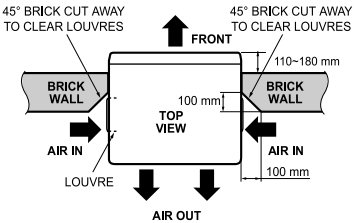

OPTION B

Installations of the Unit into the Cabinet

1 Slide the air conditioner into the case. Reinstall the 2 screws ❶ removed earlier on each side of the case.

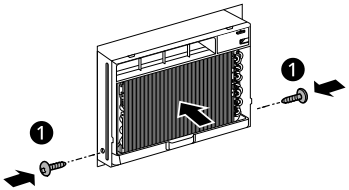

⚠ CAUTION

- The unit is heavy. Use an assistant to help lift the unit and set it in place. Lifting and maneuvering the unit by yourself could result in injury.

2 Stuff the foam ❷ around the unit to prevent air and insects from getting into the room.

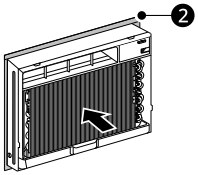

3 Before installing the front grille, pull out the vent control lever located above the unit control knobs, as shown. (on some models)

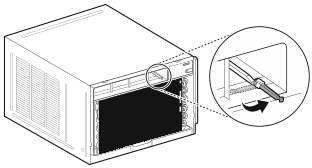

4 Connect the wire harness before assembling the front grille.

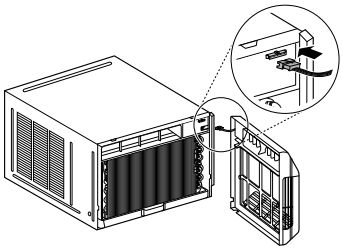

5 Attach the front grille to the cabinet by inserting the tabs on the grille into the slots on the front top of the cabinet. Push the grille in until it snaps into place.

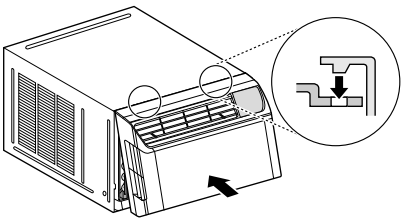

6 Open the air inlet grille and secure the front grille assembly with 2 screws (L:10 mm).

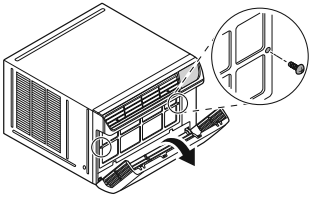

OPERATION

Control Panel and Remote Control

NOTE

- Features may change depending on the model type.

Overviews

Control Panel

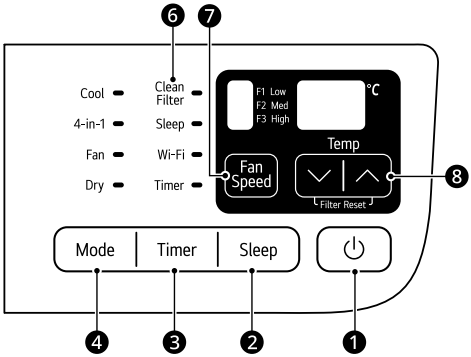

Remote Control (Type 1)

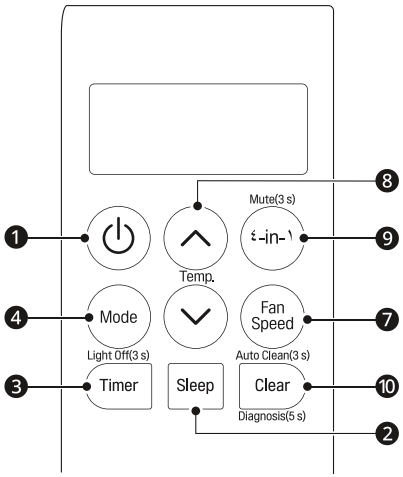

Remote Control (Type 2)

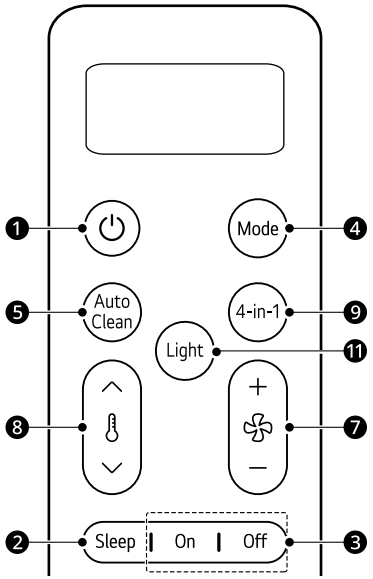

❶ **Power**

Press to turn the air conditioner ON or OFF.

❷ **Sleep**

This mode keeps operating noise to a minimum and turns the air conditioner off after a set time. The timer can be set from 1 to 7 hours.

- In the Cool, Dry mode setting temperature increases by 1 °C after 30 minutes and additional 1 °C after another 30 minutes for a more comfortable sleep.
- The setting temperature increases up to 2 °C from the preset temperature.

NOTE

- Even if the LED light is on, if you set the Sleep Timer, the LED light will automatically turn off.
- You cannot adjust the fan speed.

❸ Timer

- **Delay ON**

  When the air conditioner is off, set it to automatically turn on from 1 to 24 hours later, at its previous mode and fan settings.

- **Delay OFF**

  When the air conditioner is on, set it to automatically turn off from 1 to 24 hours later.

NOTE

- Each press of the **Timer** button advances the timer by 1 hour. After the last press the display returns to the temperature setting.
- Press the **On** or **Off** button on the remote control for 3 seconds to cancel the ON or OFF Timer. (Type2)

❹ Mode

Press the **Mode** button to cycle between 3 operating modes: **Cool** / **Fan** / **Dry**.

- **Cool**

  This mode is ideal on hot days to cool and dehumidify the room quickly. Use the **Temp** ∧, ∨ buttons to set the target room temperature and use the **Fan Speed** button to set the desired fan circulation speed.

- **Fan**

  In this mode the fan circulates air but the compressor does not run. Use the **Fan Speed** button to set the fan speed to High, Med or Low. You cannot adjust the set temperature.

- **Dry**

  This mode is ideal for rainy and damp days to dehumidify the room rather than cooling it significantly. Humidity is reduced from the room by the combination of compressor operation and the fan speed fixed at Low. The compressor and fan turn off once the set temperature is reached. Fan speed cannot be adjusted in Dry mode.

❺ Auto Clean

In the Cool and Dry modes, moisture is generated inside the indoor unit. This function reduces such moisture.

❻ Clean Filter

The Clean Filter LED lights up to remind you that the filter needs cleaning.

After cleaning the filter, press the **Temp** ∨ and ∧ buttons on the control panel simultaneously to turn off the Clean Filter LED.

NOTE

- The filter reset must be done using the control panel, not the remote control.
- This feature is a reminder to clean the air filter for more efficient operation.
- The LED light turns on after 250 hours of operation.

❼ Fan Speed

Press to set the fan speed to Low (F1), Medium (F2) or High (F3).

❽ Temp

The thermostat monitors the room temperature to maintain the desired temperature.

Press the ∨ or ∧ arrows to increase or decrease the temperature setting.

The thermostat can be set between 16 °C - 30 °C.

❾ 4-in-1

Press **4-in-1** button repeatedly to select each step.

NOTE

- 1 step : The power Input is decreased by 20% compared to rated power input.
  - 80 is displayed on the display screen.
- 2 step : The power Input is decreased by 40% compared to rated power input.
  - 60 is displayed on the display screen.

NOTE

- 3 step : The power Input is decreased by 60% compared to rated power input.
  - 40 is displayed on the display screen.
- This function is available with Cooling Mode.
- Capacity may decrease when 4-in-1 modes is selected.
- Desired temperature is displayed about 5 seconds if you press **Fan Speed**, ∧ or ∨ button.

⑩ Clear

Cancel Sleep and Timer settings.

NOTE

- **Smart Diagnosis**

  Press the **Clear** button on the remote control for 5 seconds to run Smart Diagnosis. (Type 1)

  Press the **Mode** button on the remote control for 3 seconds to run Smart Diagnosis. (Type 2)

⑪ Light

Turns the control panel display light on or off.

NOTE

- **Wi-Fi (Wi-Fi Model Only)**

  Enables connection of the air conditioner to the home Wi-Fi.

  Press and hold the **Power** button on the remote control for 3 seconds. (Type 2)
  - Follow the instructions on **LG ThinQ** application to connect the product.
- Auto Restart : If the air conditioner turns off due to a power outage, it will restart automatically once the power is restored, with the same settings as were set before the unit turned off.
- The remote control will not function properly if the AC infrared sensor is exposed to direct light or if there are obstacles between the remote control and the air conditioner.
- Default temperature will be minimum 24 °C (in cooling cycle), when operated with remote control except power failure/power switched off.

Using the Light Off Function

You can set the brightness of the control panel.

- Press the **Mode** button on the remote control for 3 seconds. (Type 1)
- Press the **Light** button on the remote control. (Type 2)
- Press the **Mode** and **Sleep** button together on the control panel.

NOTE

- If the brightness of the indoor appliance's display is set to OFF, pressing a button on the remote control automatically turns the display on for 5 seconds.
- This function may operate differently, depending on the model.

Using the Auto Clean Function

In the **Cool** and **Dry** modes, moisture is generated inside the indoor unit. This function reduces such moisture.

- Press the **Fan Speed** button for 3 seconds, is displayed on the remote control. (Type 1)
- Press the **Auto Clean** button, is displayed on the remote control. (Type 2)

Using the Mute Function

You can turn on/off the unit’s buzzer sound.

- Press **4-in-1** button on the remote control for 3 seconds. (Type 1)

Inserting the Batteries into the Wireless Remote Control

Insert AAA (1.5 V) batteries into the wireless remote control.

Remote Control (Type 1)

1 Remove the cover on the back of the remote control.

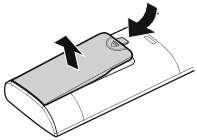

2 With the plus and minus poles facing as marked, insert two new AAA 1.5V batteries.

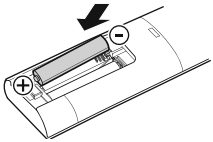

Remote Control (Type 2)

1 Remove the battery cover.

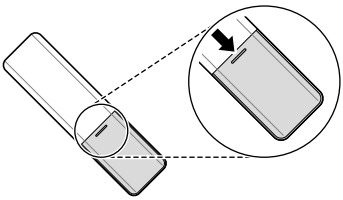

2 Insert the new batteries and make sure that the + and – terminals of the batteries are installed correctly.

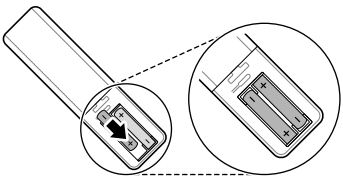

3 Reattached the cover by sliding it back into position.

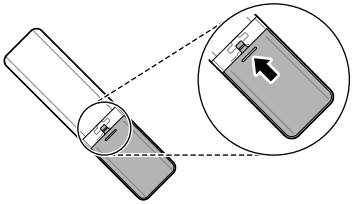

NOTE

- When the wireless remote control display begins to fade, replace AAA (1.5 V) batteries.
- Do not use old and new batteries together.
- Do not use batteries other than alkaline.

Additional Features

Air Direction

Airflow can be adjusted by changing the direction of the air conditioner's louvers.

Adjusting Horizontal Airflow Direction

The horizontal airflow is adjusted by moving the levers of the vertical louvers to the left or right.

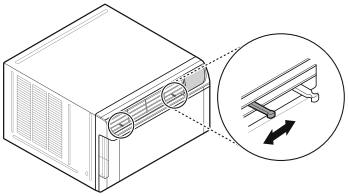

Adjusting Vertical Airflow Direction

Touch the horizontal louvers to adjust the airflow up or down.

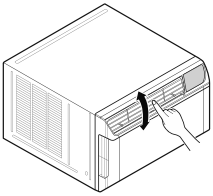

NOTE

- When the weather is extremely hot, the unit may turn off automatically to protect the compressor.

Slinger Fan

This air conditioner is equipped with a slinger fan. (See drawing.)

The fan's outer ring ❶ picks up the condensed water from the base pan if the water level gets high enough. The water is then picked up by the fan and expelled through the condenser, making the air conditioner more efficient.

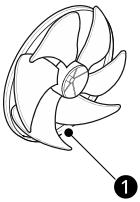

SMART FUNCTIONS

LG ThinQ Application

This feature is only available on models with Wi-Fi.

The **LG ThinQ** application allows you to communicate with the appliance using a smartphone.

LG ThinQ Application Features

Common features

Communicate with the appliance from a smartphone using the **LG ThinQ** application.

- **Smart Diagnosis**
  - If you experience a problem while using the appliance, this smart diagnosis feature will help you diagnose the problem.

Additional features

More features are available if your appliance is connected to Wi-Fi.

- Settings
  - Allows you to set various options on the appliance and in the application.

NOTE

- In the following cases, you must update the network information for each appliance in the **LG ThinQ** application under **Device Cards** > **Settings** > **Change Network**.
  - wireless router is changed
  - wireless router password is changed
  - Internet service provider is changed
- The application is subject to change for appliance improvement purposes without notice to users.
- Functions may vary by model.

Installing LG ThinQ Application and Connecting an LG Appliance

Models with QR Code

Scan the QR code attached to the product using the camera or a QR code reader application on your smartphone.

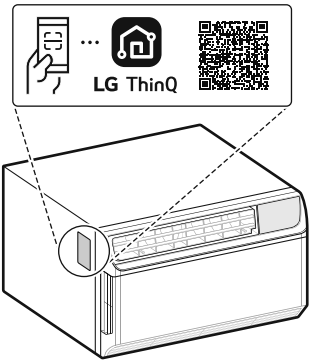

Models without QR Code

1. Search for and install the **LG ThinQ** application from the Google Play Store or Apple App Store on a smartphone.

2. Run the **LG ThinQ** application and sign in with your existing account or create an LG account to sign in.

3. Touch the add (+) button on the **LG ThinQ** application to connect your LG appliance. Follow the instructions in the application to complete the process.

NOTE

- To verify the Wi-Fi connection, check that the Wi-Fi indicator on the control panel is lit.
- The appliance supports 2.4 GHz Wi-Fi networks only. To check your network frequency, contact

your Internet service provider or refer to your wireless router manual.

- **LG ThinQ** is not responsible for any network connection problems or any faults, malfunctions, or errors caused by network connection.
- The surrounding wireless environment can make the wireless network service run slowly.
- If the distance between the appliance and the wireless router is too far, the signal strength becomes weak. It may take a long time to connect or installation may fail.
- If the appliance is having trouble connecting to the Wi-Fi network, it may be too far from the router. Purchase a Wi-Fi repeater (range extender) to improve the Wi-Fi signal strength.
- The network connection may not work properly depending on the Internet service provider.
- The Wi-Fi connection may not connect or may be interrupted because of the home network environment.
- The appliance cannot be connected due to problems with the wireless signal transmission. Unplug the appliance and wait about a minute before trying again.
- The wireless network name (SSID) should be a combination of English letters (A-Z) and numbers (0-9). Do not use special characters.
- Smartphone user interface (UI) may vary depending on the mobile operating system (OS) and the manufacturer.
- If the security protocol of the router is set to **WEP**, you may fail to set up the network. Please change it to other security protocols (**WPA2** is recommended) and connect the product again.

Energy Manager+ (On Some Models/LG ThinQ)

The air conditioner power consumption is automatically adjusted based on a schedule and target power consumption set by the user.

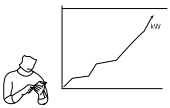

NOTE

- When using **Energy Manager+** function, cooling output may be reduced, depending on the remaining target power amount.
- When the target electricity consumption is exceeded, the **Energy Manager+** function is disabled.
- The power usage shown through the **LG ThinQ** application may differ from the actual power usage shown on your utility bill.
- Power consumption information may vary depending on the appliance.
- Power consumption may differ from results measured using other measuring devices.
- Depending on the environment in which the device is installed, measured power consumption may vary.
- Measured power consumption may vary depending on the usage environment or usage method of the home appliance.
- When setting the usage time, the appliance does not automatically turn on or off.
- Even during the operation of the **Energy Manager+** function, the function set with the remote control is reflected first.
- Actual usage may differ.

Open Source Software Notice Information

To obtain the source code that is contained in this product, under GPL, LGPL, MPL, and other open source licenses that have the obligation to disclose source code, and to access all referred license terms and copyright notices, please visit https://opensource.lge.com.

LG Electronics will also provide open source code to you for a charge covering the cost of performing such distribution upon email request to opensource@lge.com.

This offer is valid to anyone in receipt of this information for a period of three years after our last shipment of this product.

Diagnosis Using LG ThinQ

Use this feature to help you diagnose and solve problems with your appliance.

NOTE

- For reasons not attributable to LGE's negligence, the service may not operate due to external factors such as, but not limited to, Wi-Fi unavailability, Wi-Fi disconnection, local app store policy, or application unavailability.
- The feature may be subject to change without prior notice and may have a different form depending on where you are located.

Using LG ThinQ to Diagnose Issues

If you experience a problem with your Wi-Fi equipped appliance, it can transmit troubleshooting data to a smartphone using the **LG ThinQ** application.

- Launch the **LG ThinQ** application and select the **Smart Diagnosis** feature in the menu. Follow the instructions provided in the **LG ThinQ** application.

Using Audible Diagnosis to Diagnose Issues

Follow the instructions below to use the audible diagnosis method.

- Launch the **LG ThinQ** application and select the **Smart Diagnosis** feature in the menu. Follow the instructions for audible diagnosis provided in the **LG ThinQ** application.

1 Plug the power plug in the outlet properly.

2 Place the mouthpiece of your smartphone close to the appliance.

3 **Remote Type 1**
Press and hold the **Clear** button for 5 seconds or longer.

Remote Type 2
Press and hold the **Mode** button for 3 seconds or longer.

- Keep the smartphone in place until the data transfer has finished.

4 After the data transfer is complete, the diagnosis will be displayed in the application.

NOTE

- For best results, do not move the phone while the tones are being transmitted.
- Be sure to keep ambient noise to a minimum or the phone may not correctly receive the buzzer beeps from the indoor unit.

MAINTENANCE

Cleaning

⚠ WARNING

- Before cleaning or performing maintenance, disconnect the power supply and wait until the fan stops.

Check the air filter at least twice a month to see if cleaning is necessary. Trapped particles in the filter can build up and block the airflow, reducing cooling capacity and causing an accumulation of frost on the evaporator.

Cleaning the Air Filter

1 Remove the air filter from the front grille by pulling the filter forward and then up slightly.

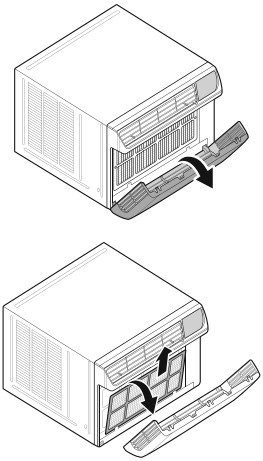

2 Wash the filter using lukewarm water below 40 ℃ (104 ℉).

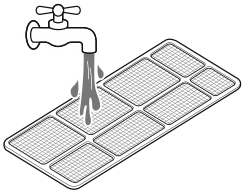

3 Gently shake the excess water from the filter and replace.

4 Dry the filter in the shade.

5 Insert the filter into Front grile.

Cleaning the Air Conditioner

- Wipe the front grille and inlet grille with a cloth dampened with a mild detergent solution.
- Wash the cabinet with mild soap or detergent and lukewarm water, then polish using liquid appliance wax.

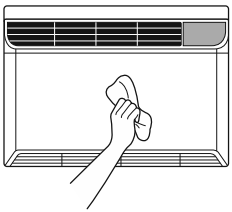

NOTE

- To ensure continued peak efficiency, the condenser coils (outside of product) should be checked periodically and cleaned if clogged with soot or dirt from outside air.

NOTE

- For repair and maintenance, contact a LG Electronics Customer Service Hotline. Have your model number and serial number available.

TROUBLESHOOTING

Before Calling for Service

The appliance is equipped with an automatic error-monitoring system to detect and diagnose problems at an early stage. If the appliance does not function properly or does not function at all, check the following before you call for service.

Normal Sounds You May Hear

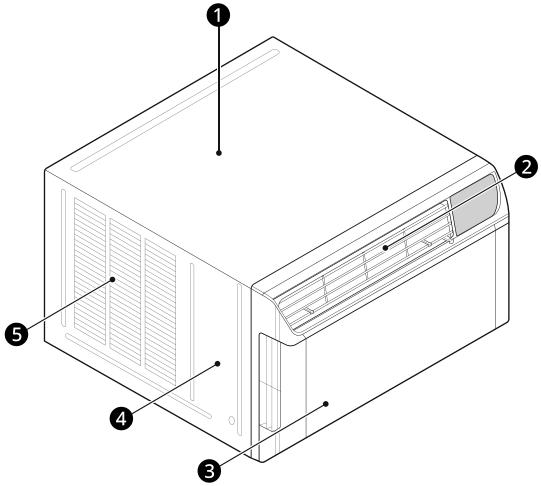

❶ **High-Pitched Chatter**

Today's high efficiency compressors may have a high-pitched chatter during the cooling cycle.

❷ **Sound of Rushing Air**

At the front of the unit, you may hear the sound of rushing air being moved by the fan.

❸ **Gurgle/Hiss**

Gurgling or hissing noises may be heard due to refrigerant passing through the evaporator during normal operation.

❹ **Vibration**

Unit may vibrate and make noise because of poor wall or window construction or incorrect installation.

❺ **Pinging or Swishing**

Droplets of water hitting condenser during normal operation may cause pinging or swishing sounds.

Operation

Symptoms	Possible Cause & Solution
Air conditioner does not start.	**The air conditioner is unplugged.** • Make sure the air conditioner plug is pushed completely into the outlet.
	The fuse is blown/circuit breaker is tripped. • Check the house fuse/circuit breaker box and replace the fuse or reset the breaker.
	Power failure. • If power failure occurs, turn the mode control to off. When power is restored, wait 3 minutes to restart the air conditioner to prevent tripping of the compressor overload.
Air conditioner does not cool as it should.	**Airflow is restricted.** • Make sure there are no curtains, blinds, or furniture blocking the front of the air conditioner.
	The temp control may not be set correctly. • Set the target temperature to a level lower than the current temperature.
	The air filter is dirty. • Clean the filter at least every 2 weeks. See the MAINTENANCE section.
	The room may have been hot. • When the air conditioner is first turned on, you need to allow time for the room to cool down.
	Cold air is escaping. • Check for open fumace floor registers and cold air returns.
	Cooling coils have iced up. • See ‘Air conditioner freezing up’ below.
Air conditioner freezing up.	**The cooling coils are iced over.** • Ice may block the airflow and obstruct the air conditioner from properly cooling the room. Set the mode control at High Fan or High Cool.
Water drips outside.	**Hot, humid weather.** • This is normal.
Water drips Indoors.	**The air conditioner is not tilted to the outside.** • For proper water disposal, make sure the air conditioner slants slightly from the cabinet front to the rear.
Water collects in base pan.	**Moisture reduced from air and drains into base pan.** • This is normal for a short period in areas with little humidity; normal for a longer period in very humid areas.

Symptoms	Possible Cause & Solution
Air conditioner turns on and off rapidly.	**Dirty air filter - air restricted.** • Clean air filter.
	Outside temperature extremely hot. • Refer to installation instructions or check with installer.
Noise when unit is cooling.	**Air movement sound.** • This is normal. If too loud, set to lower fan speed.
	Window vibration - poor installation. • Refer to installation instructions or check with installer.
Room too cold.	**Set temperature too low.** • Increase set temperature.

Wi-Fi

Symptoms	Possible Cause & Solution
Your home appliance and smartphone are not connected to the Wi-Fi network.	**The password for the Wi-Fi that you are trying to connect to is incorrect.** • Find the Wi-Fi network connected to your smartphone and remove it, then register your appliance on **LG ThinQ**.
	Mobile data for your smartphone is turned on. • Turn off the **Mobile data** of your smartphone and register the appliance using the Wi-Fi network.
	The wireless network name (SSID) is set incorrectly. • The wireless network name (SSID) should be a combination of English letters (A-Z) and numbers (0-9). Do not use special characters.
	The router frequency is not 2.4 GHz. • Only a 2.4 GHz router frequency is supported. Set the wireless router to 2.4 GHz and connect the appliance to the wireless router. To check the router frequency, check with your Internet service provider or the router manufacturer.
	The distance between the appliance and the router is too far. • If the distance between the appliance and the router is too far, the signal may be weak and the connection may not be configured correctly. Move the location of the router so that it is closer to the appliance.

APPENDIX

Information

Disposal of Your Old Appliance

1. When this crossed out wheeled bin symbol is depicted on the product and its operator's manual, it means the product is covered by E-Waste Management Rules India published by MoEF & CC, Govt. of India and are meant to be recycled, dismantled, refurbished or disposed off.

2. Do's

- a. The product is required to be handed over only to the authorized recycler for disposal.
- b. Keep the product in isolated area, after it becomes non-functional/unrepairable so as to prevent its accidental breakage.

Don'ts

- a. The product should not be opened by the user himself/herself, but only by authorized service personnel.
- b. The product is not meant for re-sale to any unauthorized agencies/scrap dealer/kabariwalah.
- c. The product is not meant for mixing into household waste stream.
- d. Do not keep any replaced spare part(s) from the product in exposed area.

3. Any disposal through unauthorized agencies/person will attract action under Environment (Protection) Act 1986.

4. This product is complied with the requirement of Hazardous Substances as specified under E-Waste Management Rules India published by MoEF & CC, Govt. of India.

5. To locate a nearest collection centre or call for pick-up (limited area only) for disposal of this appliance, please contact No. 08069379999, Toll Free No. 1800-315-9999 for details. All collection centre and pick up facilities are done by third parties with LG Electronics India Ltd. Merely as a facilitator. For more detailed information, please visit : http://www.lg.com/in.

अपने पुराने उपकरण का निपटान (ई- अपशिष्ट नियमों के अनुसार)

1. जब इस काटे गए पहिये वाले बिन का चिह्न किसी उपकरण और इसके ऑपरेटर और उसके ऑपरेटर की पुस्तिका के साथ संलग्न होता है, तो इसका मतलब है कि इसे "ई- अपशिष्ट" (प्रबंधन और हथालन) नियम के अंतर्गत सम्मलित किया गया है और इसके पुनर्नवीनीकरण, नवीनीकरण, विघटन और निपटान के लिए बनाया गया है।
   MoEF & CC भारत सरकार द्वारा प्रकाशित (भारतीय "ई- अपशिष्ट" (प्रबंधन और हथालन))

2. करें

   क. उपकरण को सिर्फ अधिकृत पुनः नवीनीकरणकर्ता को ही निपटारन करने हेतु हस्तांतरित करें।

   ख. जब उपकरण कार्यरत ना हो, इसे अलग क्षेत्र में रखें ताकि उपकरण से होने वाली दुर्घटनाओं से बचा जा सके।

   ना करें

   क. इस उपकरण को स्वयं उपयोगकर्ता द्वारा नहीं खोला जाना चाहिए, बल्कि केवल अधिकृत सेवा कर्मियों द्वारा ही खोला जाना चाहिए।

   ख. इस उपकरण को पुन: बिक्री के लिए किसी भी अनधिकृत संस्था /भंगार वाला /कबाड़ीवाला को ना दे।

   ग. इस उपकरण को किसी घरेलू अपशिष्ट सामान के साथ मिलाकर ना रखें।

   घ. उपकरण के बदले हुए या आंतरिक पुरजो को खुले क्षेत्र में न रखें।

3. यदि किसी अनधिकृत विभाग या व्यक्ति के द्वारा निपटारन किया जाता है तो यह पर्यावरण (सुरक्षा) अधिनियम १९८६ के अंतर्गत आता है।

4. यह उत्पाद ई- अपशिष्ट (प्रबंधन और हथालन) नियम के तहत निर्दिष्ट खतरनाक पदार्थो की आवश्यकता का पालन करता है।
   MoEF & CC, भारत सरकार द्वारा प्रकाशित (भारतीय "ई- अपशिष्ट" (प्रबंधन और हथालन))

5. उपरोक्त पदार्थो के निपटारन के लिए नजदीकी निपटारन संसथान (संकीर्ण क्षेत्र) में कॉल करे। अधिक जानकारी के लिए हमारे नंबर **08069379999**, टोल फ्री नंबर **1800-315-9999** पर पर कॉल करें।सभी संग्रहण केंद्र व पिक-अप की सुविधाएं किसी थर्ड -पार्टी जो "**LG Electronics India Ltd.**" को अपनी सेवाएं प्रदान कर रही हों से करवाए।
   अधिक जानकारी के लिए, कृपया देखें वेब साइट : **http://www.lg.com/in**

Memo

Memo

Brand Owner (LG Electronics India Ltd.) & Packaging Type Details as per PWM Rules

Packaging type	Company name	Registration number	Thickness
Plastic Sheet	LG Electronics India Ltd	BO-13-000-07-AAACL1745Q-22	0.05 mm and above
Multilayered bag	LG Electronics India Ltd		N/A

LG Electronics India Ltd.

Phone	08069379999 1800 315 9999 [Toll Free]
WhatsApp No.	9711709999
Mobile Application	'LG Service India Mobile App' available at Google Play
SNS	www.facebook.com/LGIndiaPage www.twitter.com/LGIndia
Address	Regd. Office: LG Electronics India Ltd., A-24/6 Mohan Cooperative Industrial Estate, Mathura Road, New Delhi-110044 CIN No. L32107DL1997PLC220109

24 hours, 7 days a week (except National Holidays)