Refrigerator

User manual

Free Standing Appliance

SAMSUNG

Untitled-1 1 2024-07-23 4:46:16

Contents

Contents

Safety information 3

Important safety symbols and precautions 6
Severe warning signs for transportation and site 7
Critical installation warnings 7
Installation cautions 11
Critical usage warnings 12
Usage cautions 17
Cleaning cautions 19
Critical disposal warnings 21
Additional tips for proper usage 22
Saving Energy Tips 24
This appliance is intended to be used in household and similar applications such as 25
Instructions about the WEEE 25

Installation 26

Refrigerator at a glance 26
Step-by-step installation 29

Operations 34

Main panel 34
SmartThings (applicable models only) 38
Special features 41

Maintenance 42

Handle and care 42
Cleaning 44
Replacement 45

Troubleshooting 46

General 46
Do you hear abnormal sounds from the refrigerator? 48
SmartThings (applicable models only) 50

Open Source Announcement 51

Untitled-1 2 2024-07-23 4:46:16

Safety information

- Before using your new Samsung Refrigerator, please read this manual thoroughly to ensure that you know how to operate the features and functions that your new appliance offers safely and efficiently.
- This appliance is not intended for use by persons (including children) with reduced physical, sensory, or mental capabilities, or those who lack experience and knowledge, unless they have been given supervision or instruction concerning the use of the appliance by a person responsible for their safety.
- This appliance can be used by children aged from 8 years and above and persons with reduced physical, sensory or mental capabilities or lack of experience and knowledge if they have been given supervision or instruction concerning use of the appliance in a safe way and understand the hazards involved.
  Children shall not play with the appliance. Cleaning and user maintenance shall not be made by children without supervision.
- Warnings and Important Safety Instructions in this manual do not cover all possible conditions and situations that may occur.
  It is your responsibility to use common sense, caution, and care when installing, maintaining, and operating your appliance.

Untitled-1 3 2024-07-23 4:46:16

Safety information

- Because these following operating instructions cover various models, the characteristics of your refrigerator may differ slightly from those described in this manual and not all warning signs may be applicable. If you have any questions or concerns, contact your nearest service center or find help and information online at www.samsung.com.
- R-600a or R-134a is used as a refrigerant. Check the compressor label on the rear of the appliance or the rating label inside the fridge to see which refrigerant is used for your refrigerator. When this product contains flammable gas (Refrigerant R-600a), contact your local authority in regard to safe disposal of this product.
- In order to avoid the creation of a flammable gas-air mixture if a leak in the refrigerating circuit occurs, the size of the room in which the appliance may be sited depends on the amount of refrigerant used.
- Never start up an appliance showing any signs of damage. If in doubt, consult your dealer. The room must be 1 m^3 in size for every 8 g of R-600a refrigerant inside the appliance. The amount of refrigerant in your particular appliance is shown on the identification plate inside the appliance.
- Refrigerant squirting out of the pipes could ignite or cause an eye injury. When refrigerant leaks from the pipe, avoid any naked flames and move anything flammable away from the product and ventilate the room immediately.
  - Failing to do so may result in fire or explosion.
- It is hazardous for anyone other than an Authorized Service Person to service this appliance.

Untitled-1 4 2024-07-23 4:46:16

- Do not store explosive substances such as aerosol cans with a flammable propellant in this appliance.
- To avoid contamination of food, please respect the following instructions:
  - Opening the door for long periods can cause a significant increase of the temperature in the compartments of the appliance.
  - Clean regularly surfaces that can come in contact with food and accessible drainage systems.
  - Clean water tanks if they have not been used for 48 h; flush the water system connected to a water supply if water has not been drawn for 5 days.
  - Store raw meat and fish in suitable containers in the refrigerator, so that it is not in contact with or drip onto other food.
  - Two-star frozen-food compartments are suitable for storing pre-frozen food, storing or making icecream and making ice cubes.
  - One-, two- and three-star compartments are not suitable for the freezing of fresh food.
  - If the refrigerating appliance is left empty for long periods, switch off, defrost, clean, dry, and leave the door open to prevent mould developing within the appliance.

WARNING; Risk of fire / flammable materials

Untitled-1 5 2024-07-23 4:46:16

Safety information

Important safety symbols and precautions

Please follow all safety instructions in this manual. This manual uses the following safety symbols.

⚠ WARNING

Hazards or unsafe practices that may result in **severe personal injury, property damage, and/or death**.

⚠ CAUTION

Hazards or unsafe practices that may result in **severe personal injury and/or property damage**.

NOTE

Useful information that helps users understand or benefit from the refrigerator.

These warning signs are here to prevent injury to you and others.

Please follow them carefully.

After reading this section, keep it in a safe place for future reference.

Untitled-1 6 2024-07-23 4:46:16

Severe warning signs for transportation and site

⚠ WARNING

- When transporting and installing the appliance, care should be taken to ensure that no parts of the refrigerating circuit are damaged.
  - Refrigerant leaking from the pipe work could ignite or cause an eye injury. If a leak is detected, avoid any naked flames or potential sources of ignition and air the room in which the appliance is standing for several minutes.
  - This appliance contains a small amount of isobutane refrigerant (R-600a), a natural gas with high environmental compatibility that is, however, also combustible. When transporting and installing the appliance, care should be taken to ensure that no parts of the refrigerating circuit are damaged.

Critical installation warnings

⚠ WARNING

- Do not install the refrigerator in a damp location or place where it may come in contact with water.
  - Deteriorated insulation on electrical parts may cause an electric shock or fire.
- Do not place this refrigerator in direct sunlight or expose it to the heat from stoves, room heaters, or other appliances.

Untitled-1 7 2024-07-23 4:46:16

Safety information

- Do not plug several appliances into the same multiple power strip. The refrigerator should always be plugged into its own individual electrical outlet which has a voltage rating that matches the voltage listed on the refrigerator's rating plate.
  - This provides the best performance and also prevents overloading of house wiring circuits, which could cause a fire hazard from overheated wires.
- If the wall socket is loose, do not insert the power plug.
  - There is a risk of electric shock of fire.
- Do not use a power cord that has cracks or abrasion damage along its length or at either end.
- Do not bend the power cord excessively or place heavy objects on it.
- Do not pull or excessively bend the power cord.
- Do not twist or tie the power cord.
- Do not hook the power cord over a metal object, place a heavy object on the power cord, insert the power cord between objects, or push the power cord into the space behind the appliance.
- When moving the refrigerator, be careful not to roll over or damage the power cord.
  - This may result in an electric shock or fire.
- Never unplug your refrigerator by pulling on the power cord. Always grip the plug firmly and pull straight out from the outlet.
  - Damage to the cord may cause a short-circuit, fire, and/or electric shock.
- Do not store explosive substances such as aerosol cans with a flammable propellant in this appliance.

Untitled-1 8 2024-07-23 4:46:17

- Do not install this appliance near a heater or inflammable material.
- Do not install this appliance in a location where gas may leak.
  - This may result in an electric shock or fire.
- This refrigerator must be properly located and installed in accordance with the instructions in this manual before you use it.
- Connect the power plug in the proper position with the cord hanging down.
  - If you connect the power plug upside down, the wire can get cut off and cause a fire or electric shock.
- Make sure that the power plug is not crushed or damaged by the back of the refrigerator.
- Keep the packing materials out of reach of children.
  - There is a risk of death from suffocation if a child puts the packing materials on his or her head.
- The appliance must be positioned so that the plug is accessible after installation.
  - Failing to do so may result in an electric shock or fire due to electric leakage.
- Do not install this appliance in a humid, oily or dusty location, in a location exposed to direct sunlight and water (rain drops).
  - Deteriorated insulation of electrical parts may cause an electric shock or fire.
- If any dust or water is in the refrigerator, pull out power plug and contact your Samsung Electronics service center.
  - Otherwise there is a risk of fire.

Untitled-1 9 2024-07-23 4:46:17

Safety information

- Do not stand on top of the appliance or place objects (such as laundry, lighted candles, lighted cigarettes, dishes, chemicals, metal objects, etc.) on the appliance.
  - This may result in an electric shock, fire, problems with the product, or injury.
- You need to remove all the protective plastic film before you initially plug the product in.
- Children should be supervised to ensure that they do not play with the snap rings used for door adjustment or the water tube clips.
  - There is risk of death by suffocation if a child swallows a snap ring or water tube clip. Keep the snap rings and water tube clips out of children's reach.
- The refrigerator must be safely grounded.
  - Always make sure that you have grounded the refrigerator before attempting to investigate or repair any part of the appliance. Power leakages can cause severe electric shock.
- Never use gas pipes, telephone lines, or other potential lightning attractors as an electrical ground.
  - You must ground the refrigerator to prevent any power leakages or electric shocks caused by current leakage from the refrigerator.
  - This may result in an electric shock, fire, explosion, or problems with the product.
- Plug the power plug into the wall socket firmly. Do not use a damaged power plug, damaged power cord, or loose wall socket.
  - This may result in an electric shock or fire.

Untitled-1 10 2024-07-23 4:46:17

- If the power cord is damaged, have it replaced immediately by the manufacturer or one of its service agents.
- The fuse on the refrigerator must be changed by a qualified technician or service company.
  - Failing to do so may result in an electric shock or personal injury.
- When positioning the appliance, ensure the supply cord is not trapped or damaged.
- Do not locate multiple portable socket-outlets or portable power supplies at the rear of the appliance.

Installation cautions

⚠ CAUTION

- Allow sufficient space around the refrigerator and install it on a flat surface.
  - Keep the ventilation space in the appliance enclosure or mounting structure clear of obstructions.
- Allow the appliance to stand for 2 hours before loading foods after installation and turning on.
- We strongly recommend you have a qualified technician or service company install the refrigerator.
  - Failing to do so may result in an electric shock, fire, explosion, problems with the product, or injury.
- Overload on any one door may fell the refrigerator, causing physical injury.

Untitled-1 11 2024-07-23 4:46:17

Safety information

Critical usage warnings

⚠ WARNING

- Do not insert the power plug into a wall socket with wet hands.
  - This may result in an electric shock.
- Do not store articles on the top of the appliance.
  - When you open or close the door, the articles may fall and cause personal injury and/or material damage.
- Do not insert hands, feet or metal objects (such as chopsticks, etc.) into the bottom or the back of the refrigerator.
  - This may result in an electric shock or injury.
  - Any sharp edges may cause a personal injury.
- Do not touch the inside walls of the freezer or products stored in the freezer with wet hands.
  - This may cause frostbite.
- Do not put a container filled with water on the refrigerator.
  - If spilled, there is a risk of fire or electric shock.
- Do not keep volatile or flammable objects or substances (benzene, thinner, propane gas, alcohol, ether, LP gas, and other such products) in the refrigerator.
  - This refrigerator is for storing food only.
  - This may result in fire or explosion.
- Children should be supervised to ensure that they do not play with the appliance.
  - Keep fingers out of “pinch point” areas. Clearances between the doors and cabinet are necessarily small. Be careful when you open the doors if children are in the area.

Untitled-1 12 2024-07-23 4:46:17

- Do not let children hang on the door or door bins. A serious injury may occur.
- Do not let children go inside the refrigerator. They could become trapped.
- Do not insert your hands into the bottom area under the appliance.
  - Any sharp edges may cause personal injury.
- Do not store pharmaceutical products, scientific materials, or temperature sensitive products in the refrigerator.
  - Products that require strict temperature controls must not be stored in the refrigerator.
- Do not place or use electrical appliance inside the refrigerator/freezer, unless they are of a type recommended by the manufacturer.
- If you smell pharmaceutical or smoke, pull out power plug immediately and contact your Samsung Electronics service center.
- If any dust or water is in Refrigerator, pull out power plug and contact your Samsung Electronics service center.
  - Otherwise there is a risk of fire.
- Do not let children step on a drawer.
  - The drawer may break and cause them to slip.
- Do not leave the doors of the refrigerator open while the refrigerator is unattended and do not let children enter inside the refrigerator.
- Do not allow babies or children go inside the drawer.
  - It can cause death from suffocation by entrapment or personal injury.

Untitled-1 13 2024-07-23 4:46:17

Safety information

- Do not overfill the refrigerator with food.
  - When you open the door, an item may fall out and cause personal injury or material damage.
- Do not spray volatile material such as insecticide onto the surface of the appliance.
  - As well as being harmful to humans, it may also result in an electric shock, fire, or problems with the product.
- Do not use or place any substances sensitive to temperature such as flammable sprays, flammable objects, dry ice, medicine, or chemicals near or inside of the refrigerator.
- Do not use a hair dryer to dry the inside of the refrigerator. Do not place a lighted candle in the refrigerator for removing bad odours.
  - This may result in an electric shock or fire.
- Do not stand on top of the appliance or place objects (such as laundry, lighted candles, lighted cigarettes, dishes, chemicals, metal objects, etc.) on the appliance. This may result in an electric shock, fire, problems with the product, or injury. Do not put a container filled with water on the appliance.
  - If spilled, there is a risk of fire or electric shock.
- Do not use mechanical devices or any other means to accelerate the defrosting process, other than those recommended by the manufacturer.
- Do not damage the refrigerant circuit.
- Never stare directly at the UV LED lamp for long periods of time.
  - This may result in eye strain due to the ultraviolet rays.

Untitled-1 14 2024-07-23 4:46:17

- Do not put fridge shelf in upside down. Shelf stopper could not work.
  - It may cause a personal injury because of glass shelf drop.
- If a gas leak is detected, avoid any naked flames or potential sources of ignition, and air the room in which the appliance is standing for several minutes.
  - Do not touch the appliance or power cord.
  - Do not use a ventilating fan.
  - A spark may result in explosion or fire.
- Use only the LED Lamps provided by the manufacturer or its service agents.
- Bottles should be stored tightly together so that they do not fall out.
- This product is intended only for the storage of food in a domestic environment.
- Do not attempt to repair, disassemble, or modify the refrigerator yourself.
  - Unauthorized modifications can cause safety problems. To reverse an unauthorized modification, we will charge the full cost of parts and labor.
- Do not use any fuse (such as cooper, steel wire, etc.) other than a standard fuse.
- If your refrigerator needs to be repaired or reinstalled, contact your nearest service center.
  - Failing to do so may result in an electric shock, fire, problems with the product, or injury.
- If the interior or exterior LED lamp has gone out, contact your nearest service center.

Untitled-1 15 2024-07-23 4:46:17

Safety information

- If the refrigerator emits a burning smell or smoke, unplug the refrigerator immediately and contact your Samsung Electronics service center.
  - Failing to do so may result in an electric or fire hazards.
- Pull the power plug out of the socket before changing the interior lamps of the refrigerator.
  - Otherwise, there is a risk of electric shock.
- If you experience difficulty changing a non-LED light, contact a Samsung service center.
- If the product is equipped with LED lamps, do not disassemble the Lamp Covers and LED lamps yourself.
  - Contact a Samsung service center.
- Plug the power plug into the wall socket firmly.
- Do not use a damaged power plug, damaged power cord or loose wall socket.
  - This may result in an electric shock or fire.

Untitled-1 16 2024-07-23 4:46:17

Usage cautions

⚠ CAUTION

- Do not re-freeze frozen foods that have thawed completely. Do not place carbonated or fizzy drinks in the freezer compartment. Do not put bottles or glass containers in the freezer.
  - When the contents freeze, the glass may break and cause personal injury.
- To get the best performance from the product:
  - Do not place food too close to the vents at the rear of the refrigerator as this can obstruct free air circulation in the refrigerator compartment.
  - Wrap food up properly or place it in airtight containers before putting it into the refrigerator.
  - Please observe maximum storage times and expiration dates of frozen goods.
- Do not place glass or bottles or carbonated beverages into the freezer.
  - The container may freeze and break, and this may result in injury.
- Do not place carbonated or fizzy drinks in the freezer compartment. Do not put bottles or glass containers in the freezer.
  - When the contents freeze, the glass may break and cause personal injury and property damage.

Untitled-1 17 2024-07-23 4:46:17

Safety information

- Service Warranty and Modification.
  - Any changes or modifications performed by a 3rd party on this finished appliance are not covered under Samsung warranty service, nor is Samsung responsible for safety issues that result from 3rd party modifications.
- Do not block the air vents inside the refrigerator.
  - If the air vents are blocked, especially with a plastic bag, the refrigerator can be over cooled. If a cooling period lasts too long, the water filter may break and cause water leakage.
- Wipe excess moisture from the inside and leave the doors open.
  - Otherwise, odor and mold may develop.
- If the refrigerator is disconnected from the power supply, you should wait for at least five minutes before plugging it back in.
- When the refrigerator got wet by water, pull out the power plug and contact your Samsung Electronics service center.
- Do not strike or apply excessive force to any glass surface.
  - Broken glass may result in a personal injury and/or property damage.
- Be careful that your fingers are not caught in.
- If the refrigerator is flooded, make sure to contact your nearest service center.
  - There is a risk of electric shock or fire.

Untitled-1 18 2024-07-23 4:46:17

- Do not keep vegetable oil in your refrigerator's door bins. The oil can solidify, making it foul-tasting and difficult to use. In addition, the open container can leak and the leaked oil can cause the door bin to crack. After opening an oil container, it is best to keep the container in a cool and shaded place such as a cupboard or pantry.
  - Examples of vegetable oil: olive oil, corn oil, grape-seed oil, etc.

Cleaning cautions

⚠ CAUTION

- Do not spray water directly on the inside or outside the refrigerator.
  - There is a risk of fire or electric shock.
- Do not use a hair dryer to dry the inside of the refrigerator.
- Do not place a lighted candle in the refrigerator to remove bad odors.
  - This may result in an electric shock or fire.
- Do not spray cleaning products directly on the display.
  - Printed letters on the display may come off.
- If any foreign substance such as water has entered the appliance, unplug the power plug and contact your nearest service center.
  - Failing to do so may result in an electric shock or fire.

Untitled-1 19 2024-07-23 4:46:17

Safety information

- Use a clean, dry cloth to remove any foreign matter or dust from the power plug blades. Do not use a wet or damp cloth when cleaning the plug.
  - Otherwise, there is a risk of fire or electric shock.
- Do not clean the appliance by spraying water directly onto it.
- Do not use benzene, thinner, or Clorox, Chloride for cleaning.
  - They may damage the surface of the appliance and may cause a fire.
- Before cleaning or performing maintenance, unplug the appliance from the wall socket.
  - Failing to do so may result in an electric shock or fire.
- Use a clean sponge or soft cloth and a mild detergent in warm water to clean the refrigerator.
- Do not use abrasive or harsh cleansers such as window sprays, scouring cleansers, flammable fluids, muriatic acid, cleaning waxes, concentrated detergents, bleaches, or cleansers containing petroleum products on exterior surfaces (doors and cabinet), plastic parts, door and interior liners, and gaskets.
  - These can scratch or damage the material.
- Do not clean glass shelves or covers with warm water when they are cold. Glass shelves and covers may break if exposed to sudden temperature changes or impacts such as bumping or dropping.

Untitled-1 20 2024-07-23 4:46:17

Critical disposal warnings

⚠ WARNING

- Please dispose of the packaging material from this product in an environmentally friendly manner.
- Ensure that none of the pipes on the back of the refrigerator are damaged prior to disposal.
- R-600a or R-134a is used as a refrigerant. Check the compressor label on the rear of the appliance or the rating label inside the fridge to see which refrigerant is used for your refrigerator. If this refrigerator contains flammable gas (Refrigerant R-600a), contact your local authority in regard to safe disposal of this product.
- When disposing of this refrigerator, remove the door/door seals and door latch so that small children or animals cannot become trapped inside. Children should be supervised to ensure that they do not play with the appliance. If trapped inside, a child may get hurt or suffocate to death.
- Cyclopentane is used in the insulation. The gases in the insulation material require a special disposal procedure. Please contact your local authorities in regard to the environmentally safe disposal of this product.
- Keep all packaging materials well out of the reach of children, as packaging materials can be dangerous to children.
  - If a child places a bag over his or her head, the child could suffocate.

Untitled-1 21 2024-07-23 4:46:17

Safety information

- DANGER: Risk of child entrapment. Before you throw away your old refrigerator or freezer:
  - Take off the doors.
  - Leave the shelves in place so that children may not easily climb inside.

Additional tips for proper usage

- In the event of a power failure, call the local office of your electric company and ask how long the failure is going to last.
  - Most power failures that are corrected in an hour or two will not affect your refrigerator temperatures. However, you should minimize the number of door openings while the power is off.
  - Should the power failure last more than 24 hours, remove and discard all frozen food.
- The refrigerator might not operate consistently (frozen contents can thaw or temperatures can become too warm in the frozen food compartment) if sited for an extended period of time in a location where ambient air temperatures are constantly below the temperatures for which the appliance is designed.
- In case of particular foods, keeping it under refrigeration can have a bad effect on preservation due to its properties.
- Your appliance is frost free, which means there is no need to manually defrost your appliance. This will be carried out automatically.

Untitled-1 22 2024-07-23 4:46:17

- Temperature rise during defrosting complies with ISO requirements. If you want to prevent an undue rise in the temperature of frozen food while the appliance defrosts, wrap the frozen food in several layers of newspaper.
- Do not re-freeze frozen foods that have thawed completely.
- The temperature of two star section (sections) or compartment (compartments) which have two star symbol (**) is slightly higher than other freezer compartment (compartments).
  The two star section (sections) or compartment (compartments) is (are) based on the instruction and/or the condition as delivered.

Untitled-1 23 2024-07-23 4:46:17

Safety information

Saving Energy Tips

- Install the appliance in a cool, dry room with adequate ventilation. Ensure that it is not exposed to direct sunlight and never put it near a direct source of heat (a radiator, for example).
- Not to block any vents and grilles is recommended for energy efficiency.
- Allow warm food to cool down before placing it in the appliance.
- Put frozen food in the refrigerator to thaw. You can then use the low temperatures of the frozen products to cool food in the refrigerator.
- Do not keep the door of the refrigerator open for too long when putting food in or taking food out. The shorter the time the door is open, the less frost build-up you'll have in the freezer.
- It is recommended to install the refrigerator with clearance to the back and sides. This will help reduce power consumption and keep your energy bills lower.
- For the most efficient use of energy, please keep the all inner fittings such as baskets, drawers, shelves on the position supplied by manufacturer.

Untitled-1 24 2024-07-23 4:46:17

This appliance is intended to be used in household and similar applications such as

- staff kitchen areas in shops, offices and other working environments;
- farm houses and by clients in hotels, motels and other residential type environments;
- bed and breakfast type environments;
- catering and similar non-retail applications.

Instructions about the WEEE

Correct Disposal of This Product (Waste Electrical & Electronic Equipment)

(Applicable in countries with separate collection systems)

This marking on the product, accessories or literature indicates that the product and its electronic accessories (e.g. charger, headset, USB cable) should not be disposed of with other household waste at the end of their working life. To prevent possible harm to the environment or human health from uncontrolled waste disposal, please separate these items from other types of waste and recycle them responsibly to promote the sustainable reuse of material resources.

For more information on safe disposal and recycling visit our website www.samsung.com/in/support or contact our Helpline numbers - 1800 40 SAMSUNG (1800 40 7267864).

Untitled-1 25 2024-07-23 4:46:18

Installation

Follow these instructions carefully to ensure a proper installation of this refrigerator and to prevent accidents before using it.

⚠ **WARNING**

- Use the refrigerator only for its intended purpose as described in this manual.
- Any servicing must be performed by a qualified technician.
- Dispose of the product packaging material in compliance with local regulations.

Refrigerator at a glance

NOTE

The actual image and provided parts of the refrigerator may differ, depending on the model and the country.

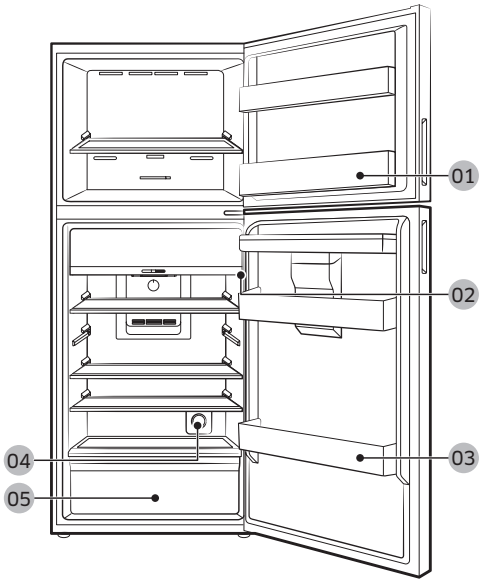

Untitled-1 26 2024-07-23 4:46:18

01 Freezer door bin

02 Main panel

03 Fridge door bin

04 Active Fresh Filter *

05 Vegetable drawer

* applicable models only

To secure more room for storage in the freezer compartment

Remove one or more optional accessories such as shelf (or shelves), twist ice maker(s), ice storage bin(s), ice bucket(s) and their supports, all of which can be removed manually without a tool.

- These optional accessories do not affect thermal and mechanical performance.
- A declared storage volume of the freezer is based on the nonexistence of those optional accessories.
- For best energy efficiency, make sure all shelves and drawers are placed in their original position.

Load limit indicator (applicable models only)

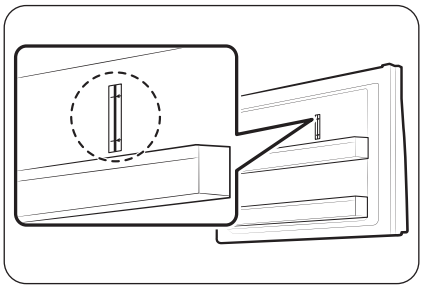

The refrigerator has a load limit indicator on the top right side of the freezer compartment.

⚠ **CAUTION**

- Do not put or keep food items over the load limit indicator. Otherwise, energy efficiency may be affected.

Untitled-1 27 2024-07-23 4:46:18

Installation

Door bins

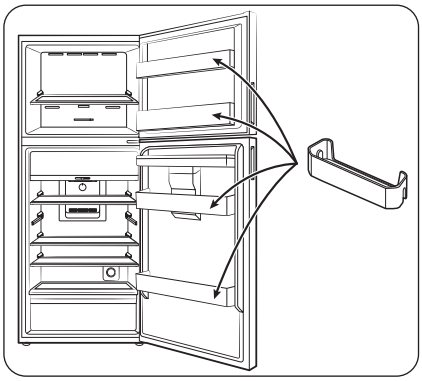

Your refrigerator ships with door bins of different types and sizes. If the door bins for your refrigerator were packaged separately, assemble them in the correct position according to the figure.

NOTE

The actual refrigerator and provided component parts of your refrigerator may differ from the illustrations in this manual, depending on the model and the country.

Untitled-1 28 2024-07-23 4:46:18

Step-by-step installation

STEP 1 Select a site

Site requirements:

- Solid, level surface without carpeting or flooring that may obstruct ventilation
- Away from direct sunlight
- Adequate room for opening and closing the door
- Away from a heat source
- Room for maintenance and servicing
- Temperature range: between 10 °C and 43 °C

Effective temperature range

The refrigerator is designed to operate normally in the temperature range specified by its class rating.

Class	Symbol	Ambient Temperature range (°C)	
		IEC 62552 (ISO 15502)	ISO 8561
Extended Temperate	SN	+10 to +32	+10 to +32
Temperate	N	+16 to +32	+16 to +32
Subtropical	ST	+16 to +38	+18 to +38
Tropical	T	+16 to +43	+18 to +43

NOTE

The cooling performance and power consumption of the refrigerator may be affected by the ambient temperature, the door-opening frequency, and the location of the refrigerator. We recommend adjusting the temperature settings as appropriate.

Untitled-1 29 2024-07-23 4:46:18

Installation

Clearance

See the pictures and table below for space requirements for installation.

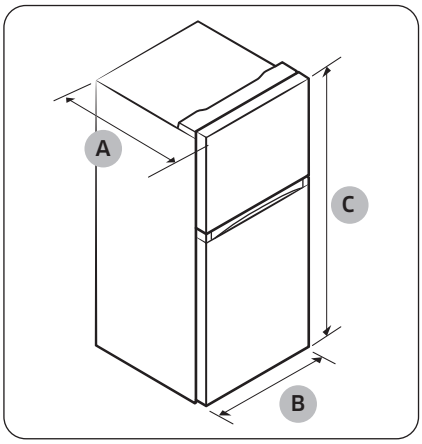

Depth "A"	725
Width “B”	790
Height “C”	1855

(unit : mm)

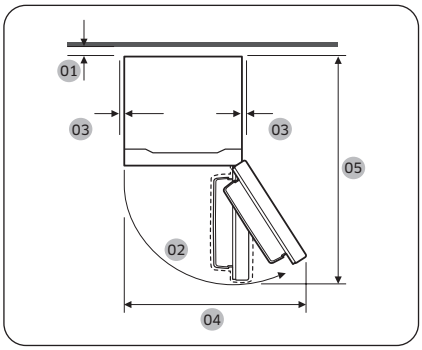

01	more than 50mm recommended
02	115° (Freezer) / 120° (Fridge)
03	At least 50 mm
04	1140
05	1447

(unit : mm)

Untitled-1 30 2024-07-23 4:46:18

STEP 2 Spacing (applicable models only)

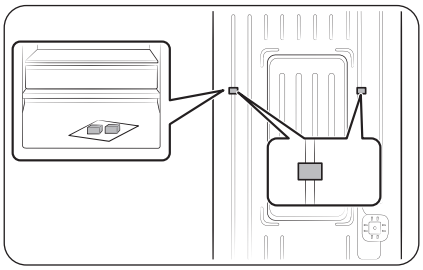

1. Open the door and locate the provided spacers (x2).
2. Unpack both spacers and attach them to the rear of the refrigerator as shown. They help ventilate air to the rear wall and save power consumption.

STEP 3 Flooring

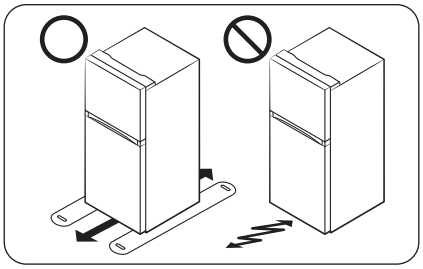

- The surface to install the refrigerator must support a fully loaded refrigerator or approximately 90 kg.
- To protect the floor, put a large piece of cardboard on each leg of the refrigerator.
- Once the refrigerator is in its final position, do not move it unless necessary to protect the floor. If you have to, use thick paper or cloth such as old carpets along the movement path.

Untitled-1 31 2024-07-23 4:46:19

Installation

STEP 4 Adjust the levelling feet

⚠ **CAUTION**

- When installed, the refrigerator must be levelled on a flat, solid floor. Not levelling the refrigerator can cause damage to the refrigerator or physical injury.
- Levelling must be performed with the refrigerator empty. Make sure no food items are inside the refrigerator.
- For safety reasons, adjust the front a little higher than the rear. Level the refrigerator using special screws (levellers) on the front legs. Use a flat-head screwdriver to turn the levellers.

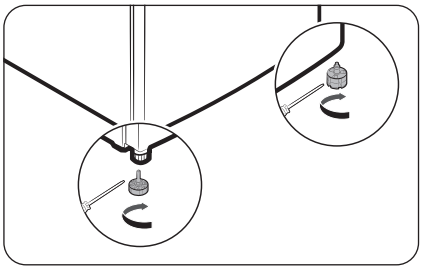

Level the refrigerator by manually adjusting the levelling feet. Turn the levelling feet clockwise to lower the position or turn anticlockwise to raise. For safety reasons, adjust the front side a little higher than the rear side.

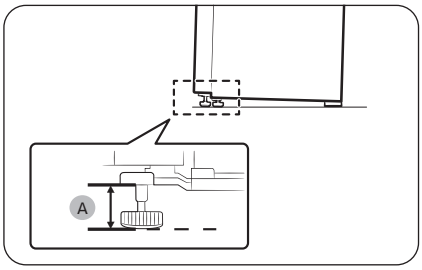

Leave the feet at 41 mm **(A)** from the floor as shown.

Untitled-1 32 2024-07-23 4:46:19

STEP 5 Initial settings

By completing the following steps, the refrigerator should be fully functioning.

1. Plug the power cord into the wall socket to turn the refrigerator on.
2. Open the door, and check if the interior light lights up.
3. Set the temperature to the coldest, and wait for about an hour. Then, the freezer will be slightly chilled, and the motor will run smoothly.
4. Wait until the refrigerator reaches the set temperature. Now the refrigerator is ready for use.

STEP 6 Final check

When the installation is complete, confirm that:

- The refrigerator is plugged into an electrical outlet and grounded properly.
- The refrigerator is installed on a flat, level surface with a reasonable clearance from the wall or the cabinet.
- The refrigerator is level and is sitting firmly on the floor.
- The door opens and closes freely, and the interior light turns on automatically when you open the door.

Untitled-1 33 2024-07-23 4:46:19

Operations

Main panel

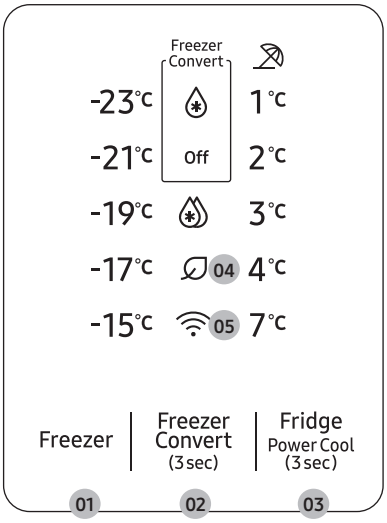

01 Freezer

02 Freezer Convert

03 Fridge / Power Cool

04 AI Energy Mode *

05 Network connection indicator *

* applicable models only

NOTE

If the door is left open for 5 minutes, the internal light will blink for 5 minutes and turn off. It is to alert deaf and hard of hearing users that a door is open. Note that this function is normal.

Untitled-1 34 2024-07-23 4:46:19

01 Freezer

Freezer	The **Freezer** button can be used to set the freezer temperature between -15 °C and -23 °C (default: -19 °C). Each time you press the button, the temperature changes in this sequence: -23 °C → -15 °C → -17 °C → -19 °C → -21 °C → -23 °C ⚠ **CAUTION** • To prevent system failure or food spoiling, do not set the temperature to -15 °C in summer (above 35 °C). • Do not store glass bottles containing liquid in the freezer. Glass bottles will crack or break into pieces when the liquid freezes.

02 Freezer Convert

Freezer Convert	You can switch the freezer to fridge mode. Please read the below instructions. • The mode changes each time you press and hold **Freezer Convert** for 3 seconds. • If you select Fridge, the Fridge indicator ( ) turns on. • If you select Freezer, the Fridge indicator turns off and the Freezer indicator turns on. The default freezer temperature is -19 °C. Your changes will be set and activated after 10 seconds. To cancel or change the mode again, press and hold **Freezer Convert** again for 3 seconds. Then, follow the instructions as mentioned above. **NOTE** If you press and hold **Freezer Convert** for 3 seconds, the refrigerator switches to selection mode where you can press **Freezer Convert** to select a different mode.

⚠ **WARNING**

- Do not put glass bottles containing liquid in the freezer. When cancelling Freezer Convert, the glass bottles may break or burst in the freezer.
- Make sure to remove frozen foods from the freezer before enabling the Freezer Convert. Frozen foods melt and spoil as the temperature increases (Freezer mode changes to Fridge mode).
- Make sure to remove chilled foods from the freezer before disabling the Freezer Convert. Chilled foods may freeze as the temperature decreases (Fridge mode changes to Freezer mode).
- When you convert the Freezer to Fridge mode, the temperature inside the freezer will increase, resulting in dew forming on the inside wall because of the temperature difference.

Untitled-1 35 2024-07-23 4:46:19

Operations

NOTE

If you want to use Freezer Convert, it is strongly recommend to use plastic containers to store food, especially vegetables.

03 Fridge / Power Cool

Fridge	To adjust the fridge temperature, press **Fridge** to select the corresponding temperature. You can change the temperature between 1 °C and 7 °C (default: 3 °C). With the temperature set to 1 °C, press **Fridge** to turn the vacation indicator on. The temperature bar turns off. Press again to deactivate Vacation mode. The temperature bar displays 7 °C. **CAUTION** • In winter, do not set the temperature control to 1 °C. This may cause problems with the cooling performance. • In summer, do not set the temperature control to 5-7 °C. This may also cause problems with the cooling performance.
Power Cool	Power Cool speeds up the cooling process at maximum fan speed. The fridge keeps running at full speed for several hours and then returns to the previous temperature. • To activate Power Cool, press and hold **Fridge** for 3 seconds. The corresponding indicator ( ) lights up, and the refrigerator will speed up the cooling process for you. • To deactivate Power Cool, press and hold **Fridge** again for 3 seconds. The fridge returns to the previous temperature setting. **NOTE** Using Power Cool increases power consumption. Make sure you turn it off and return to the previous temperature if you don't intend to use it.
Vacation	If you are going on vacation or a business trip, or if you do not intend to use the fridge for an extended time, use the Vacation mode. • To activate Vacation mode, press **Fridge** with the 1 °C indicator selected. The vacation indicator ( ) turns on while the display of the fridge temperatures will turn off. The fridge temperature will be controlled under 17 °C, but the freezer remains active as previously set. • To deactivate Vacation mode, press **Fridge** again. The fridge temperature will restore the default 7 °C. **NOTE** It is strongly recommended to empty the fridge compartment and make sure the door is closed.

Untitled-1 36 2024-07-23 4:46:20

04 AI Energy Mode (applicable models only)

- The icon appears when the AI Energy Mode is operating. You may turn on or off the AI Energy Mode in the SmartThings app. (applicable models only)

05 Network connection (applicable models only)

You can control and monitor your refrigerator on the SmartThings app. For more information, see the SmartThings (applicable models only) section.

NOTE

If the refrigerator is not connected to the SmartThings app, the Wi-Fi ( ) icon blinks to alert you when opening the door. If you see the blinking Wi-Fi ( ) icon, we recommend that you connect your refrigerator to the SmartThings app.

Turning the Wi-Fi on or off (applicable models only)

To turn the Wi-Fi on or off, press and hold Fridge for 10 seconds. The Wi-Fi ( ) icon shows the status of the Wi-fi as shown below.

- Wi-Fi Off: The Wi-Fi ( ) icon blinks for 5 seconds and then turns off.
- Wi-Fi On: The Wi-Fi ( ) icon blinks for 5 seconds and then turns on for 5 seconds.

NOTE

- You must turn on the Wi-Fi to connect the refrigerator to the SmartThings app.
- For more information, see the SmartThings (applicable models only) section.

Untitled-1 37 2024-07-23 4:46:20

Operations

SmartThings (applicable models only)

Installation

Visit the Google Play Store, Galaxy Apps, or Apple App Store and search for “SmartThings”. Download and install the SmartThings app provided by Samsung Electronics to your smart device.

NOTE

- The supporting software version of the SmartThings app is subject to change according to the OS supporting policy the manufacturer provides. In addition, as for the SmartThings app or the functions that the app supports, the new application update policy on the existing OS version can be suspended due to usability or security reasons.
- The SmartThings app is subject to change without notice to improve usability or performance. As the mobile phone OS version is updated every year, the SmartThings is also updated continually according to the latest OS. If you have enquiries regarding the items mentioned above, please contact us at st.service@samsung.com
- Recommended encryption systems include WPA/TKIP and WPA2/AES. Any newer or non-standard Wi-Fi authentication protocols are not supported.
- Wireless networks may be affected by the surrounding wireless communication environment.
- If your Internet service provider has registered the MAC address of your PC or modem for identification, your Samsung Smart Refrigerator may fail to connect to the Internet. If this happens, contact your Internet service provider for technical assistance.
- The firewall settings of your network system may prevent your Samsung Smart Refrigerator from accessing the Internet. Contact your Internet service provider for technical assistance. If this symptom continues, contact a local Samsung service centre or retailer.
- To configure the wireless access point (AP) settings, see the user manual of the AP Router.
- Samsung Smart Refrigerators support both Wi-Fi 2.4 GHz with IEEE 802.11 b/g/n and Soft-AP protocols. (IEEE 802.11 n is recommended.)
- Unauthorized Wi-Fi wireless routers may fail to connect to applicable Samsung Smart Refrigerators.

Untitled-1 38 2024-07-23 4:46:20

Samsung account

You are required to register your Samsung account to use the app. If you don’t have a Samsung account, follow the app’s on-screen instructions to create a free Samsung account.

Getting started

Turn on the device you want to connect, open the SmartThings app on your phone, and then follow the instructions below.

If a pop-up appears saying that a new device has been found, tap ADD NOW.

If a pop-up doesn't appear, tap the + button, and then select the device you want to connect from the list of available devices.

If your device isn't in the list of available devices, tap Supported Devices, select the device type (Refrigerator), and then select the specific device model.

Follow the instructions in the app to set up your device. Once setup is complete, your refrigerator will appear as a "card" on your Devices screen.

Refrigerator app

Integrated control

You can monitor and control your refrigerator at home and on the go.

- Tap the refrigerator icon on the SmartThings Dashboard or tap the Devices icon at the bottom of the Dashboard, and then tap the refrigerator "card" to open the Refrigerator page.
- Check the operation status or notifications related to your refrigerator, and then change options or settings if necessary.

NOTE

Some options or settings of the refrigerator may not be available for remote control.

Untitled-1 39 2024-07-23 4:46:20

Operations

Category	Item	Description
Monitoring	Fridge temperature	Displays the current temperature setting of the fridge.
	Energy monitoring	Checks the accumulated power consumption of the refrigerator for the last 180 days.
Functions	Power Cool	You can turn Power Cool on or off, and check the current settings.
	Power Freeze (applicable models only)	You can turn on or off the Power Freeze in the SmartThings app. Power Freeze speeds up the freezing process at maximum fan speed. The freezer keeps running at full speed for 50 hours and then returns to the previous temperature. To freeze large amounts of food, activate Power Freeze for at least 20 hours before putting food in the freezer. • When you turn on Power Freeze, the refrigerator will speed up the freezing process for you. • When the Power Freeze process is complete, the freezer returns to the previous temperature setting. • When you turn off Power Freeze, the freezer returns to the previous temperature setting. **NOTE** Using Power Freeze increases energy consumption. Make sure you turn it off and return to the previous temperature if you do not intend to use it.
Alarms	Door opening	This alarm is triggered if the fridge or freezer door is open for more than 2 minutes.
AI Energy Mode (applicable models only)	You can turn on or off the AI Energy Mode under the Energy menu in the SmartThings app. You can check the status of the AI Energy Mode on the SmartThings app. On some models, the icon appears on the main panel to indicate that AI Energy Mode is operating. (applicable models only) Turning on the AI Energy Mode decreases energy consumption, but it may also reduce the cooling performance.	

Untitled-1 40 2024-07-23 4:46:20

Special features

The actual image and special functions of your refrigerator may differ, depending on the model and the country.

Ice making (applicable models only)

Twist ice maker (applicable models only)

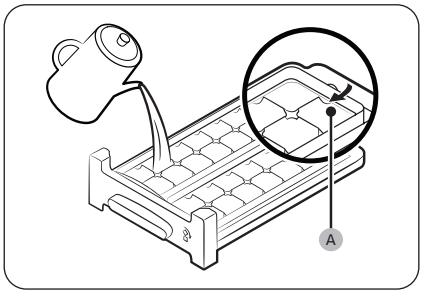

1. Open the freezer door, and slide open the ice tray.
2. Fill the tray with water up to the **maximum level (A)** marked on the inner rear of the tray.
3. Slide the tray back into position.

NOTE

The ice making time depends on your temperature settings.

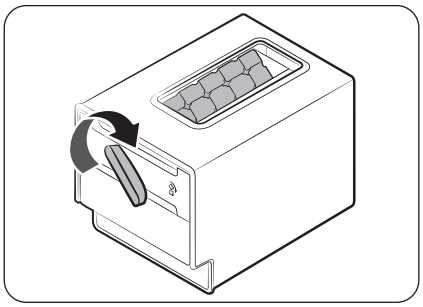

NOTE

- Make sure the ice cube storage bin is in place under the ice tray.
- To dispense the ice cubes, turn the ice tray handle to the right to empty the ice cubes into the bin.
- To take out the bin, pull it forward.
- Put the twist ice maker on the freezer shelf if it does not fit under the shelf.

Untitled-1 41 2024-07-23 4:46:20

Maintenance

Handle and care

Shelves (fridge/freezer)

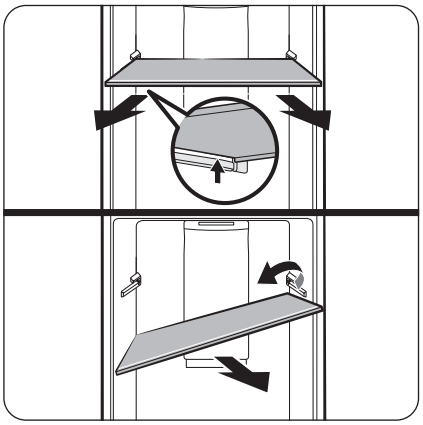

To remove the shelf, hold it with both hands and lift it to release it from the rear hook. Then, tilt it on one side and pull it out.

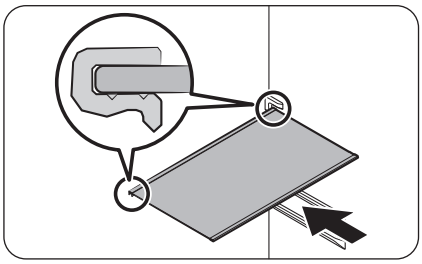

Before you insert the shelf, check the shape of the back of the shelf. Then, insert the shelf in the reverse order of removal.

⚠ **CAUTION**

- The shelf must be inserted correctly. Do not insert it upside down or back to front.
- Shelves are heavy, therefore be careful when you handle them.

Vegetable drawer

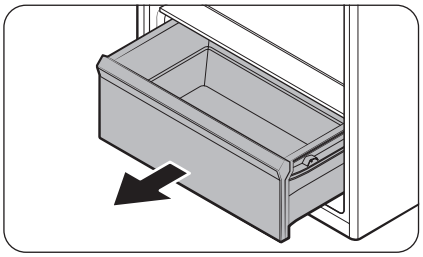

Gently lift up the front of the drawer and slide out.

Untitled-1 42 2024-07-23 4:46:21

Vegetable shelf

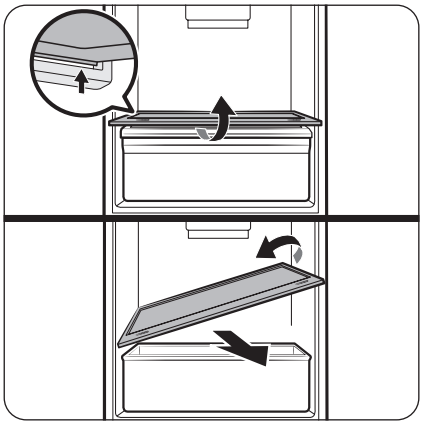

Hold the vegetable shelf with both hands and lift it to release it from the rear hook. Then, tilt it on one side and pull it out.

Door bins

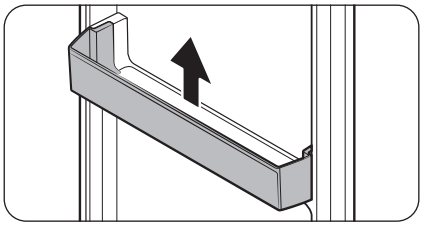

Slightly lift up and pull out the door bins.

⚠ **CAUTION**

To prevent accidents, empty the door bins before removing them.

Untitled-1 43 2024-07-23 4:46:21

Maintenance

Cleaning

⚠ **WARNING**

- Do not use benzene, thinner, or home/car detergent such as Clorox™ for cleaning purposes. They may damage the surface of the refrigerator and cause a fire.
- Do not spray water onto the refrigerator. This may cause electric shock.

Regularly use a dry cloth to remove all foreign substances such as dust or water from the power plug terminals and contact points.

1. Unplug the power cord of the refrigerator.
2. Use a moistened soft lint-free cloth or paper towel to clean the refrigerator's interior and exterior.
3. When done, use a dry cloth or paper towel to dry well.
4. Plug in the power cord of the refrigerator to turn the refrigerator on.

NOTE

If you have removed any removable parts such as shelves for cleaning, refer to the overall layout in the Refrigerator at a glance section to make sure you have reinserted correctly.

Untitled-1 44 2024-07-23 4:46:21

Replacement

Deodorizer filter (applicable models only)

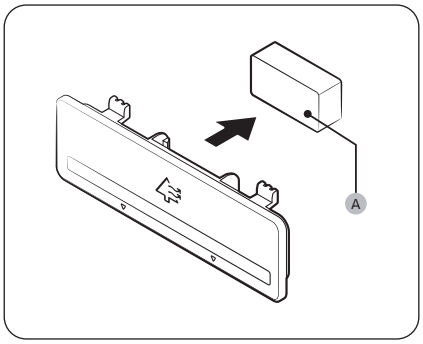

While holding the top and bottom sides of the filter case, unlock the filter case to reveal the **deodorizer filter (A)**. Replace the filter, and then reinsert the case.

Lamps and active fresh filter

Neither lamps nor the active fresh filter is user-serviceable. Do not attempt to replace them yourself. To replace them, contact a local Samsung service centre.

⚠ **WARNING**

The lamps are not user-serviceable. Do not attempt to replace a lamp yourself. This can cause electric shock.

Untitled-1 45 2024-07-23 4:46:21

Troubleshooting

Before calling for service, review the checkpoints below. Any service calls regarding normal situations (No Defect Cases) will be charged to users.

General

Temperature

Symptom	Possible causes	Solution
Fridge/freezer does not operate. Fridge/freezer temperature is warm.	• Power cord is not plugged in properly.	• Properly plug in the power cord.
	• Temperature control is not set correctly.	• Set the temperature lower.
	• Refrigerator is located near a heat source or direct sunlight.	• Keep the refrigerator away from direct sunlight or a heat source.
	• Not enough clearance between refrigerator and sides/rear.	• We recommend that the gap between the refrigerator and nearby walls (or cabinets) is more than 50 mm.
	• Vacation mode is activated.	• Deactivate Vacation mode.
	• The refrigerator is overloaded. Food is blocking the refrigerator vents.	• Do not overload the refrigerator. Do not allow food to block ventilation.
Fridge/freezer is over-cooling.	• Temperature control is not set correctly.	• Set the temperature higher.
Interior wall is hot.	• Refrigerator has heat-proof piping in the interior wall.	• To prevent condensation from forming, the refrigerator has heat-proof piping in the front corners. If the ambient temperature rises, this equipment may not work effectively. This is not a system failure. 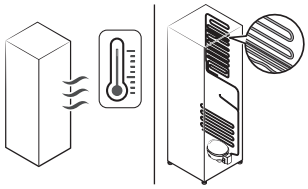

Troubleshooting

Untitled-1 46 2024-07-23 4:46:22

Odours

Symptom	Possible causes	Solution
Refrigerator has odours.	• Spoiled food.	• Clean the refrigerator and remove any spoiled food.
	• Food with strong odours.	• Make sure strong smelling food is wrapped airtight.

Condensation

Symptom	Possible causes	Solution
Condensation forms on the interior walls.	• If door is left open, moisture enters the refrigerator.	• Remove the moisture and do not open the door for a long time.
	• Food with high moisture content.	• Make sure food is wrapped airtight.
	• The temperature had risen in the freezer when it was converted to fridge mode. (applicable models only).	• Wipe any moisture with a dry cloth.

Alarm

Symptom	Possible causes	Solution
An alarm sounds.	• If the door is left open for more than two minutes, the alarm sounds until the door is closed.	• Press any button to turn off the alarm. Contact a local Samsung service centre if the alarm sounds again after 12 hours.

Frost

Symptom	Possible causes	Solution
Frost around the vents.	• Food is blocking the vents.	• Make sure no food blocks the refrigerator vents.
Frost on interior walls.	• Door is not closed properly.	• Make sure food does not block the door. Clean the door gasket.

Untitled-1 47 2024-07-23 4:46:22

Troubleshooting

Do you hear abnormal sounds from the refrigerator?

Before calling for service, review the checkpoints below. Any service calls related to normal sounds will be charged to the user.

These sounds are normal.

- When starting or ending an operation, the refrigerator may make sounds similar to a car engine igniting. As the operation stabilizes, the sounds will decrease.

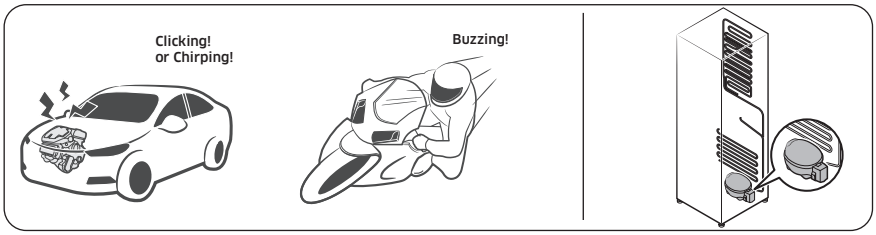

- While the fan is operating, these sounds may occur. When the refrigerator reaches the set temperature, no fan sound will occur.

- During a defrost cycle, water may drip on the defrost heater, causing sizzling sounds.

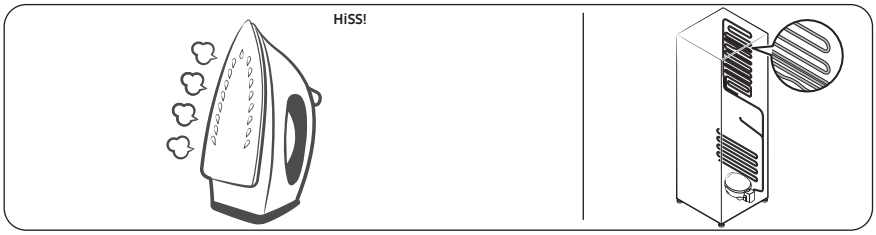

Untitled-1 48 2024-07-23 4:46:22

- As the refrigerator cools or freezes, refrigerant gas moves through sealed pipes, causing bubbling sounds.

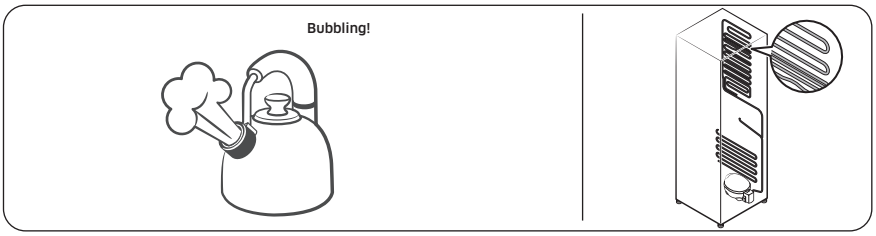

- As the refrigerator temperature increases or decreases, plastic parts contract and expand, creating knocking noises. These noises occur during the defrosting cycle or when electronic parts are working.

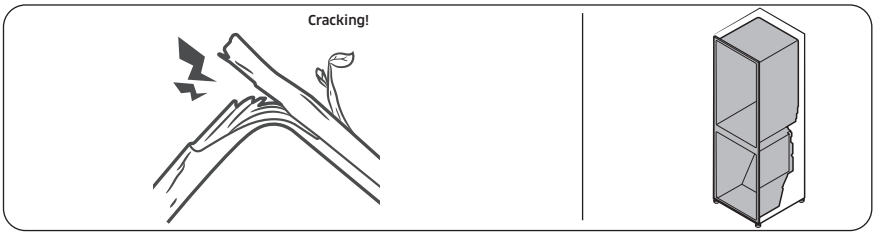

- For ice maker models: When the water valve opens to fill the ice maker, buzzing sounds may occur.
- Because of pressure equalizing when opening and closing the refrigerator door, whooshing sounds may occur.

Untitled-1 49 2024-07-23 4:46:23

Troubleshooting

SmartThings (applicable models only)

Symptom	Action
Could not find “SmartThings” in the app market.	• The supporting software version of the SmartThings app is subject to change according to the OS supporting policy the manufacturer provides. In addition, as for the SmartThings app or the functions that the app supports, the new application update policy on the existing OS version can be suspended due to usability or security reasons.
The SmartThings app fails to operate.	• The SmartThings app is available for applicable models only. • The old Samsung Smart Refrigerator app cannot connect with Samsung Smart Home models.
The SmartThings app is installed but is not connected to my refrigerator.	• You must log into your Samsung account to use the app. • Make sure that your router is operating normally. • If the Wi-Fi icon on the refrigerator’s display is off, this indicates that no network connection has been established yet. In this case, use the SmartThings app to connect and register your refrigerator to the access point (AP) of your house.
Could not log into the app.	• You must log into your Samsung account to use the app. • If you don’t have a Samsung account, follow the app’s onscreen instructions to create one.
An error message appears when I try to register my refrigerator.	• Easy Connection may fail due to the distance from your access point (AP) or electrical interference from the surrounding environment. Wait a moment and try again.
The SmartThings app is successfully connected to my refrigerator but does not run.	• Exit and restart the SmartThings app, or disconnect and reconnect the router. • Power off the refrigerator, and then power it on again after 1 minute.
The Wi-Fi icon is blinking. ( )	• Connect your refrigerator with the SmartThings app before use. When the connection is made successfully, the indicator stops blinking. - If you fail to make connection or don’t want to use the app, press and hold the **Fridge** button for 10 seconds. The indicator stops blinking.

Untitled-1 50 2024-07-23 4:46:23

Open Source Announcement

The software included in this product contains open source software.

The following URL http://opensource.samsung.com/opensource/SMART_TP1_0/seq/0 leads to open source license information as related to this product.

Untitled-1 51 2024-07-23 4:46:23

SAMSUNG

Contact SAMSUNG WORLD WIDE

If you have any questions or comments relating to Samsung products, please contact the SAMSUNG customer care centre.

Country	Contact Center	Website
INDIA	1800 40 SAMSUNG (1800 40 7267864) (Toll-Free) 1800 5 SAMSUNG (1800 5 7267864) (Toll-Free)	www.samsung.com/in/support
NEPAL	16600172667 (Toll Free for NTC Only) 9801572667 (Toll Free for Ncell users)	www.samsung.com/in/support
BANGLADESH	08000-300-300 (Toll free) 09612-300-300	www.samsung.com/bd/support
SRI LANKA	011 SAMSUNG (011 7267864)	www.samsung.com/in/support

This Product is RoHS compliant

DA68-04823J-00