ECOVACS

DEEBOT X1 OMNICYCLONE

Instruction Manual

Instruction Manual.....EN I P03

Bedienungsanleitung .....DE I P33

Manuel d'instructions.....FR I P63

Manuale di istruzioni .....IT I P93

Bruksanvisning.....SE I P123

Bruksanvisning.....NO I P153

Brugsanvisning.....DK I P183

Käyttöopas .....FI I P213

Kullanım Kılavuzu .....TR I P243

For the Instruction Manual in further languages, visit: https://www.ecovacs.com

Die Bedienungsanleitung in anderen Sprachen findest du unter: https://www.ecovacs.com

Pour obtenir le Manuel d'instruction dans différentes langues, visitez : https://www.ecovacs.com.

Per il manuale d'istruzioni in altre lingue, visitare il sito Web: https://www.ecovacs.com.

Bruksanvisningen finns på fler språk på: https://www.ecovacs.com

Du finner bruksanvisningen på flere språk på: https://www.ecovacs.com

Du kan finde brugsanvisningen på flere sprog på: https://www.ecovacs.com

Käyttöopas on saatavilla muilla kielillä osoitteessa: https://www.ecovacs.com

Diğer dillerde sunulan Kullanım Kılavuzu için şu adresi ziyaret edin: https://www.ecovacs.com

IMPORTANT SAFETY INSTRUCTIONS

IMPORTANT SAFETY INSTRUCTIONS

When using an electrical Appliance, basic precautions should always be followed, including the following:

READ ALL INSTRUCTIONS BEFORE USING THIS APPLIANCE
SAVE THESE INSTRUCTIONS

1. This Appliance can be used by children aged from 8 years and above and persons with reduced physical, sensory, or mental capabilities or lack of experience and knowledge if they have been given supervision or instruction concerning use of the Appliance in a safe way and understand the hazards involved. Children shall not play with the Appliance. Cleaning and user maintenance shall not be made by children without supervision.
2. Clear the area to be cleaned. Remove power cords and small objects from the floor that could entangle the Appliance. Tuck rug fringe under the rug base, and lift items such as curtains and tablecloths off the floor.
3. If there is a drop off in the cleaning area due to a step or stairs, you should operate the Appliance to ensure that it can detect the step without falling over the edge. It may become necessary to place a physical barrier at the edge to keep the unit from falling. Make sure the physical barrier is not a trip hazard.
4. Only use as described in this manual. Only use attachments recommended or sold by the manufacturer.
5. For INDOOR household use ONLY. Do not use the Appliance in outdoor, commercial, or industrial environments.
6. Do not use without dust bin and/or filters in place.
7. Do not operate the Appliance in an area where there are lit candles or fragile objects.
8. Keep hair, loose clothing, fingers, and all parts of body away from any openings and moving parts.
9. Do not operate the Appliance in a room where an infant or child is sleeping.
10. Do not use and store in extremely hot or cold environments (below -5°C /23°F or above 40°C/104°F). Please charge the robot in temperature above 0°C/32°F and below 40°C/104°F.

11. Do not use Appliance on wet surfaces or surfaces with standing water.
12. Do not allow the Appliance to pick up large objects like stones, large pieces of paper, or any item that may clog the Appliance.
13. Do not use Appliance to pick up flammable or combustible materials such as gasoline, printer or copier toner, or use in areas where they may be present.
14. Do not use Appliance to pick up anything that is burning or smoking, such as cigarettes, matches, hot ashes, or anything that could cause a fire.
15. Do not put objects into the suction intake. Do not use if the suction intake is blocked. Keep the intake clear of dust, lint, hair, or anything that may reduce air flow.
16. If the power cord is damaged, it must be replaced by the manufacturer or its service agent in order to avoid a hazard.
17. Turn OFF the power switch before cleaning or maintaining the Appliance.
18. The lithium battery type suitable for CH2512 is Max. 4 cells, max. nominal voltage DC 14.4V, rated capacity 5,800mAh.The battery must be removed and discarded according to local laws and regulations before disposal of the Appliance.
19. Please dispose of used batteries according to local laws and regulations.
20. Do not incinerate the Appliance even if it is severely damaged. The batteries can explode in a fire.
21. The Appliance must be used in accordance with the directions in this Instruction Manual. Ecovacs Home Service Robotics cannot be held liable or responsible for any damages or injuries caused by improper use.
22. The robot contains batteries that are only replaceable by skilled persons. To replace the robot's battery, please contact Customer Service.
23. Please make sure your power supply source voltage matches the power voltage marked on the OMNI Station.
24. Use only the original rechargeable battery and OMNI Station provided with the Appliance from the manufacturer. Non-rechargeable batteries are prohibited.
25. Take care not to damage the power cord. Do not pull on or carry the Appliance or OMNI Station by the power cord, use the power cord

as a handle, close a door on the power cord, or pull power cord around sharp edges or corners. Do not run Appliance over the power cord. Keep power cord away from hot surfaces.

26. Do not use the OMNI Station if it is damaged. The power supply is not to be repaired and not to be used any longer if it is damaged or defective.
27. Do not use with a damaged power cord or receptacle. Do not use the Appliance or OMNI Station if it is not working properly, has been dropped, damaged, left outdoors, or come in contact with water. It must be repaired by the manufacturer or its service agent in order to avoid hazards.
28. The plug must be removed from the receptacle before cleaning or maintaining the OMNI Station.
29. Remove the Appliance from the OMNI Station, and turn OFF the power switch to the Appliance before removing the battery for disposal of the Appliance.
30. When not using the OMNI Station for a long period of time, please unplug it.
31. If the robot will not be used for a long time, power OFF the robot for storage and unplug the OMNI Station.
32. WARNING-Add clean water into the clean tank only.
33. **WARNING:** For the purposes of recharging the battery, only use the detachable supply unit CH2512 provided with the Appliance.

To satisfy RF exposure requirements, a separation distance of 20 cm or more should be maintained between this device and persons during device operation.

To ensure compliance, operations at closer than this distance is not recommended. The antenna used for this transmitter must not be co-located in conjunction with any other antenna or transmitter.

Device Update

Typically, some devices are updated bi-monthly, but not always so specific.

Some devices, especially those that went on sale more than three years ago, will only be updated if a critical vulnerability is found and fixed.

To check the current software version and enable automatic updates, go to Settings > Robot Advanced Settings > About Your Robot > Update in the app. The current version is displayed there; tap Update to enter the page and select Automatic Update to enable it.

	Caution: hot surface
	Short-circuit-proof safety isolating transformer
	Switch mode power supply
	For indoor use only
	Direct current
	Alternating current
	Before charging, read the instructions.
	Polarity of the charging port
	Time-lag miniature fuse-link

The remote surveillance is for the absolute private use of non-public, private owned places for the pure self-protection and single control intended only. Please be aware of the local data protection based legal obligations in case of use. No surveillance of public places, especially with clandestine intent and/or on the part of the employer without justified reasons. Such not justified use is in the risk and responsibility of the user only.

European Union Compliance Statement

Information on Disposal for Users of Waste Electrical & Electronic Equipment



This symbol on the product or on its packaging indicates that used electrical and electronic products should not be mixed with unsorted municipal waste. For proper treatment, it is your responsibility to dispose of your waste equipment by arranging to return it to designated collection points.
Disposing of this product correctly will help save valuable resources and prevent any potential negative effects on human health and the environment, which could otherwise arise from inappropriate waste handling.
To return your used device, please use the return and collection systems or contact the retailer where the product was purchased, which is free of charge, please contact your local authority for further details of your nearest designated collection point.
Penalties may be applicable for incorrect disposal of this waste, in accordance with your national legislation.

Information on Disposal for Users of used batteries



This symbol means that batteries and accumulators, at their end-of-life, should not be mixed with unsorted municipal waste. Your participation is an important part of the effort to minimize the impact of batteries and accumulators on the environment and on human health. For proper recycling you can return this product or the batteries or accumulators it contains to your supplier or to a designated collection point, which is free of charge.
Disposing of this product correctly will help save valuable resources and prevent any potential negative effects on human health and the environment, which could otherwise arise from inappropriate waste handling.
Penalties may be applicable for incorrect disposal of this waste, in accordance with your national legislation.
there are separate collection systems for used batteries and accumulators.
Please, dispose of batteries and accumulators correctly at your local community waste collection/recycling center.

Restriction of the use of certain hazardous substances (RoHS) Directive

Ecovacs Home Service Robotics Co., Ltd. hereby declares the whole product including parts (cables, cords, and so on) meets the requirements of RoHS Directive 2011/65/EU and amendment Commission Delegated Directive (EU) 2015/863 on the restriction of the use of certain hazardous substances in electrical and electronic equipment ("RoHS recast" or "RoHS 2.0").

Radio Equipment Directive

Ecovacs Home Service Robotics Co., Ltd. hereby declares that the product listed in this section comply with the essential requirements and other relevant provisions of the Radio Equipment Directive 2014/53/EU.

Europe Authorised Representative:

CE

ECOVACS Europe GmbH
Holzstrasse 2 | D-40221 Düsseldorf | Germany

Ecovacs Home Service Robotics Co., Ltd. hereby declares that the product comply with the essential requirements and other relevant provisions of the RoHS Directive 2011/65/EU and amendment Commission Delegated Directive (EU) 2015/863, the Radio Equipment Directive 2014/53/EU.
The declaration of conformity can be viewed at the following address:
https://www.ecovacs.com/global/compliance.

PACKAGE COMPONENTS

❶ Package Contents



DEEBOT

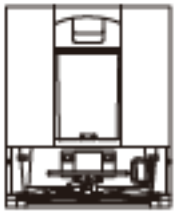

OMNI Station

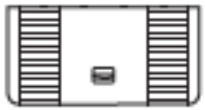

Base



Power Cord



Instruction Manual



Corner guard

Note:

- A thoughtful pair of corner guards is included to enhance user safety and improve handling comfort.
  To install: Align the inner slot of the corner guard with the edge and press it into place. Compatible with all DEEBOT corner designs.
- Figures in this manual are for reference only and may differ from the appliance. Product design and specifications are subject to changes without notice.

❷ Product Diagram

1. DEEBOT Front View

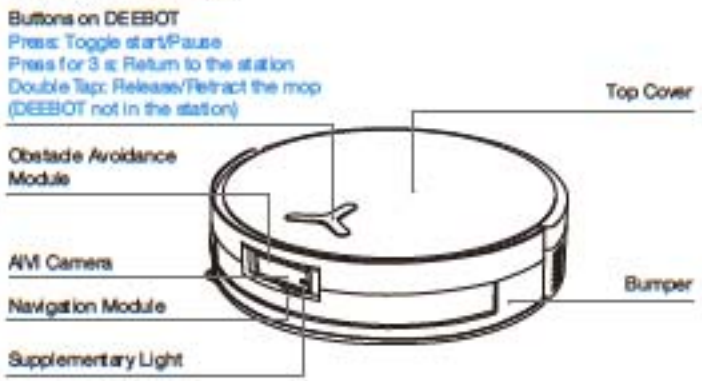

2. DEEBOT Bottom View

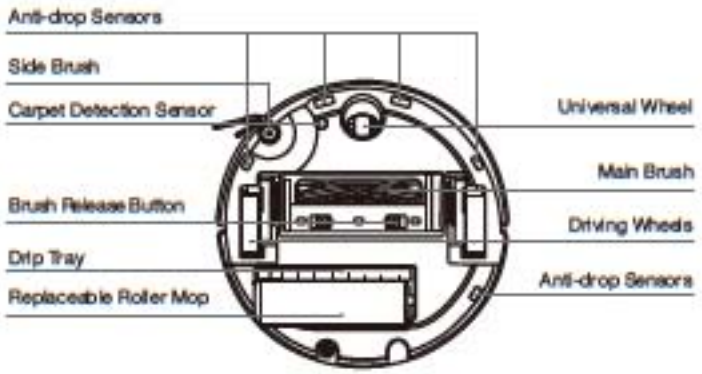

3. Inside DEEBOT (Under the Top Cover)

RESET Button
Network Setup: Press the RESET Button, and a voice prompt will be heard to connect DEEBOT to the App.
Restore default settings: Press and hold the RESET button for 5 seconds. After hearing the voice prompt, the startup music will play, and DEEBOT will be restored to its default settings. Exercise caution when using this function.

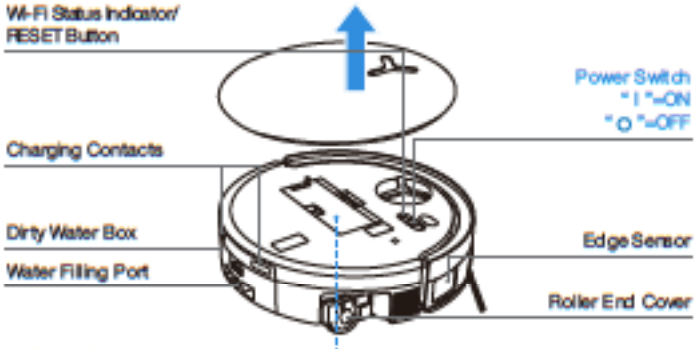

4. Dust Bin

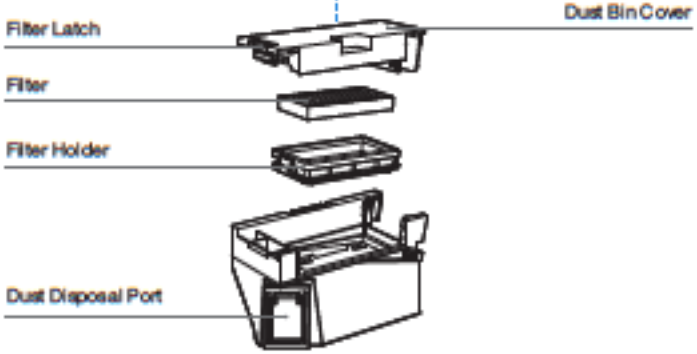

5. OMNI Station Front View

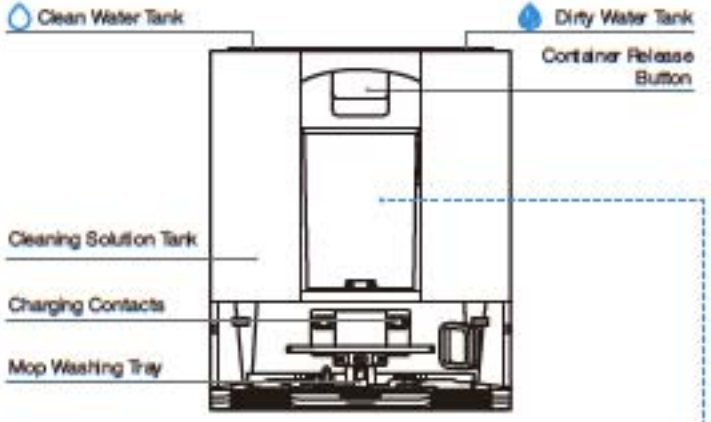

Note:
• Flashing Orange: Please check the ECOVACS HOME App for the cause of the malfunction.
• If DEEBOT fails to charge, please wipe the charging contacts with a clean and dry cloth.

6. Dust Container

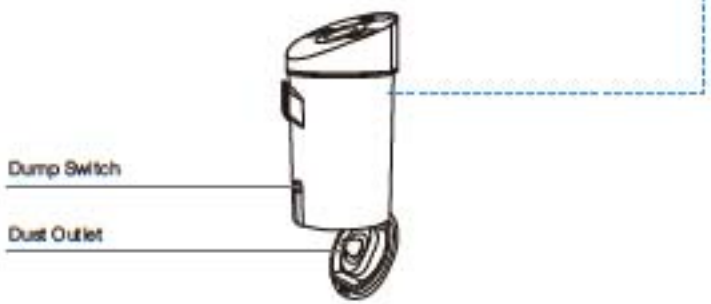

7. OMNI Station Back View



8. Indicator Light

Light Effect	State
Breathing White	Charging
Solid White	Fully Charged/Running
Solid Red	Low Battery
Flashing Red	DEEBOT Alarm
Flashing Orange	Station Alarm

9. Sensors Overview

Name	Functional Description
Navigation Module	Laser Ranging is applied to measure the distance between DEEBOT and surrounding objects based on the time difference of reflection, allowing the module to map against the objects around while DEEBOT is moving. The detection range is 10 m.
Obstacle Avoidance Module	Infrared Ranging and similar triangles are applied to measure the distance between the surrounding objects and DEEBOT. When the sensor detects an object nearby, DEEBOT will automatically take a turn to avoid bumping into the object. The detection range is 0.3 m.
Anti-drop Sensors	Using the Time-of-Flight (dToF) principle, the dToF sensor located on DEEBOT's bottom continuously measures the distance between DEEBOT and the ground. Meanwhile, infrared sensors on the bottom detect the distance using infrared ranging technology. DEEBOT will not move forward when there are stairs in front (such as when the height of the white surface is 55 mm or more, or the height of the black surface is 30 mm or more) and the identified height exceeds the preset one, realizing the anti-drop feature.
Carpet Detection Sensor	The sensor emits 300 kHz ultrasound, whose energy will be absorbed by the carpet, causing the echoed energy to be lower than the threshold. DEEBOT thereby detects the carpet's presence. In the ECOVACS laboratory, more than 50 types of carpets available on the market are identified.
Anti-collision Sensor	With the principle of the Optocoupler Switch, DEEBOT will avoid obstacles when they are about to collide.
Edge Sensor	With Infrared Ranging, the edge sensor detects the distance between the DEEBOT and objects on the side. When there is a wall or obstacles on the right, the DEEBOT performs edge cleaning to avoid missing any spots and prevent collisions.
AIVI Camera	Use AI cameras to collect images of the surrounding environment. Realize video recording. Through interaction with MIC, remote video call can be realized.
Microphone	The microphone captures sound through diaphragm vibrations caused by the human voice traveling through the air. This enables voice recording and Voice Control to direct the DEEBOT to complete the assigned job through the acquisition and algorithms of sound models. The effective wake distance is 5 m.

INITIAL SETUP AND USE

❶ Notes before Cleaning



Tidy up the Area to be Cleaned

For the maximum cleaning area possible, put furniture, such as tables, chairs, and pedestal fans, in their proper place and put away low-lying items, such as weight scales, before using DEEBOT



Prevent DEEBOT from Falling

Place a physical barrier at the edge of a drop, such as staircases and steps, to stop DEEBOT from falling over the edge.



Open Doors and Help DEEBOT Explore

Open all room doors to help DEEBOT fully explore your house during the first use.



Provide Sufficient Lighting

Ensure all cleaning areas are well-lit to support DEEBOT's AI camera in accurately avoiding obstacles such as shoes, socks, and cords.



Remove objects, including cables, clothes, and slippers, from the floor to improve cleaning efficiency.



Before using the product on a carpet with tasseled edges, please fold the tassels under the carpet.



Please do not stand in narrow spaces, such as hallways, to avoid blocking the navigation module.



Ensure the clarity of DEEBOT's vision and avoid scratching or smudging the AI camera lens with fingerprints or oily stains. Use a clean, soft cloth to wipe the camera, instead of cleaning agents, detergents, or sprays.

② Quick Start

Remove all protective materials before using the appliance.

1. Station Installation

The sound of "click" indicates proper installation.



2. Assemble and Place the Station

Place the OMNI station against the wall on a flat, hard surface. Do not place items within 0.05 m on either side and 0.8 m in front. Wrap the excess power cord around the cable management slot on the back of the station.

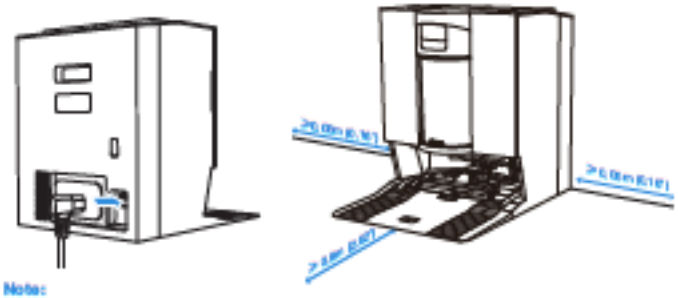

Note:

- If there are reflective objects such as mirrors and reflective skirting lines near the station, the bottom 14 cm of such objects should be covered.
- Do not place the station under direct sunlight or in high-temperature environments.
- Place the station in a location with a strong Wi-Fi signal for a better user experience.

③ Download ECOVACS HOME APP

To enjoy all available features, it is recommended that you control your DEEBOT via the ECOVACS HOME App.

1. Scan the QR code under the top cover to download the App.

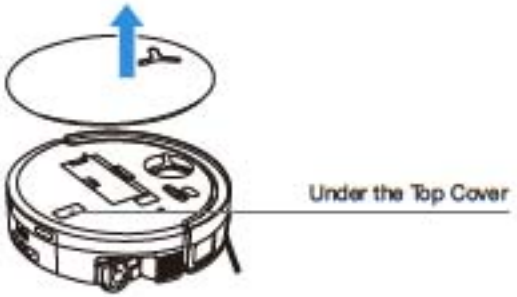

2. Search "ECOVACS HOME" on the App Store or Google Play to download the App.



Note: Follow the instructions on the App to complete the registration, login, and connection.

4 Connect DEEBOT with APP

Via Bluetooth: Turn on DEEBOT and your mobile phone Bluetooth. Allow the App to obtain mobile phone Bluetooth permission. Tap to scan the QR Code on DEEBOT or tap or Add in the App to find the nearby DEEBOT.

Via Wi-Fi: You can also choose to connect DEEBOT with the App through other methods according to the prompts on the App's page.

Note: Please connect via Bluetooth for a better experience.

Wi-Fi Network Requirements:
- You are using a 2.4 GHz or 2.4/5 GHz mixed network.
- Your router supports 802.11b/g/n and IPv4 protocol.
- Do not use a VPN (Virtual Private Network) or Proxy Server.
- Do not use a hidden network.
- WPA and WPA2 using TKIP, PSK, AES/CCMP encryption.
- WEP EAP (Enterprise Authentication Protocol) is not supported.
- Use Wi-Fi channels 1-11 in North America and channels 1-13 outside North America (refer to local regulatory agency).
- If you are using a network extender/repeater, the network name (SSID) and password are the same as those of your primary network.
- Please enable the WPA2 on your router.

Wi-Fi Indicator Light

	Slow flashing white light	Disconnected from Wi-Fi
	Fast flashing white light	Connecting
	Steady white light	Connected to Wi-Fi

Please be aware that intelligent features such as remote startup, voice interaction, 2D/3D map display and control settings, and personalized cleaning (depending on the Appliance) require the ECOVACS HOME App, which is constantly updated. You need to agree to our Privacy Policy and User Agreement so that we can process some of your essential and necessary information before you can use certain features of the ECOVACS HOME App to control the Appliance. If you disagree with our Privacy Policy and User Agreement, such features will be unavailable. However, you can still use the basic features of this appliance for manual operation.

Network Interface Information

Name	Description
Infrared interface	The infrared interface is turned off by default, and it is activated when DEEBOT is in the charging station. When the DEEBOT is in the charging station, it will communicate with the charging station through the infrared interface.
Bluetooth	Enable Bluetooth to connect DEEBOT to the network during the network setup process. Bluetooth uses the GAP1800, GATT 1801, 8888 service for configuration and data interaction securely.
Wi-Fi	Facilitate data transfer between the app and DEEBOT, enabling control of DEEBOT through the app.
ECOVACS HOME App	ECOVACS products offer smart functions such as network setup, mapping, and cleaning mode selection (specific to each product). To utilize these features, users need to download and use the official ECOVACS HOME App.

* The DEEBOT series robotic vacuums are designed for domestic cleaning scenarios. A home Wi-Fi network is required for operation, and anti-DDOS protection needs to be configured by users through route settings.

5 Power on and Charge DEEBOT

Turn on the power switch under DEEBOT's cover ("I"= ON, "O"= OFF), and place DEEBOT in front of the station that is connected to the power supply. Use the ECOVACS HOME App or voice control to recall DEEBOT, or press and hold ⏻ on DEEBOT for 3 s, to allow DEEBOT to dock for charging.

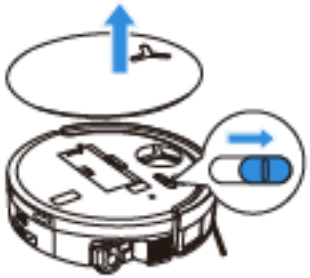

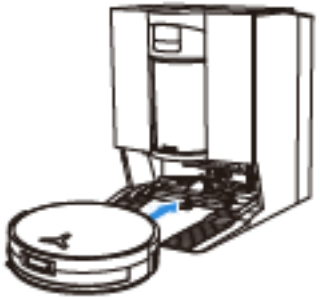

Note:
- DEEBOT cannot charge when it is powered off.
- After cleaning, it is recommended to keep DEEBOT powered on and charging to ensure it is ready for the next cleaning session.
- To ensure DEEBOT can return to charge smoothly after cleaning, start cleaning from the station and avoid moving the station during the process.

6 Fill the Clean Water Tank

Take out the clean water tank, open the tank cover, and fill the tank with water. Close the tank cover and reinstall the clean water tank.





Note:
- Use only ECOVACS DEEBOT cleaning solution to avoid malfunctions.
- Use a clean, dry cloth to wipe off any water on the surface of the tank before placing it in position.
- Make sure to lock the top covers of both water tanks securely before use.
- Any watermarks in the water tanks are from function testing. Please use it with confidence.

❼ Add Cleaning Solution (sold separately)

1. Take off the cleaning solution tank's cover, pull out the two cleaning solution boxes, and place them on a level, hard surface.

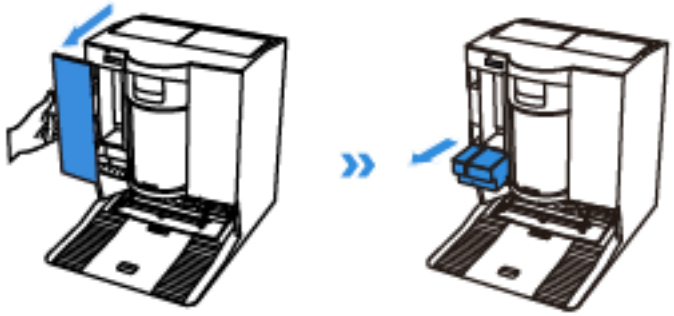

2. Pour the standard cleaning solution into the blue box and the heavy-duty cleaning solution into the black box. After securing the box lids, push them back into the station and close the tank lid.

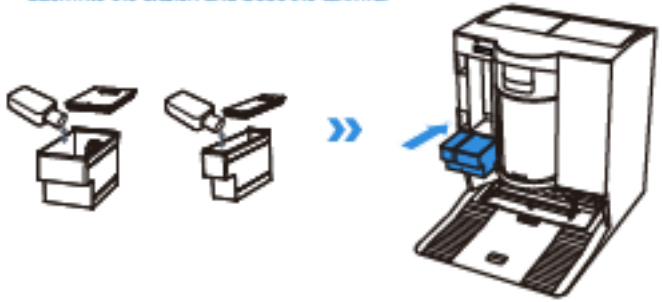

Note:
- For better performance and longer lifespan of the product, please use ECOVACS DEEBOT cleaning solution (sold separately).
- Do not pour cleaning solution into the clean water tank. Add it to the cleaning solution tank instead. Otherwise, an incorrect ratio may cause excessive foaming and reduce cleaning effectiveness.

3. Return the cleaning solution tank's cover and press the cover firmly to secure it in position.



Note: Please make sure that no foreign objects fall into the cleaning solution box.

8 Operate DEEBOT for Cleaning

1. Start Mapping

When creating a map for the first time, please follow DEEBOT to help with some minor issues.
For example, DEEBOT may get stuck under furniture. Please refer to the following solutions:
① Raise the low-sitting furniture if possible;
② Cover the bottom of the furniture;
③ Set up a virtual boundary via the App.

2. Start Cleaning

- The DEEBOT's water tank is automatically refilled through the station. Manual refilling is not needed.
- When mopping, DEEBOT will recognize floor types and is able to lift mops automatically when encountering carpets. Please do not use DEEBOT on shaggy rugs or carpets with fibres longer than 10 mm. It is recommended to fold up the shaggy rugs with fibres longer than 10 mm during the cleaning process, or set the shaggy carpeted area as a no-entry zone by setting a virtual boundary in the ECOVACS HOME App.

Please ensure that DEEBOT is in the station and is fully charged before cleaning for the first time. Tap ⏻ on DEEBOT to start. You can also use the ECOVACS HOME App or voice control to start.

3. Pause

Tap ⏻ on DEEBOT to pause it while it is working. You can also use the ECOVACS HOME App or voice control to pause DEEBOT.

4. Wake Up

After pausing for a while, all indicator lights on DEEBOT will go out. To wake up DEEBOT, press ⏻.

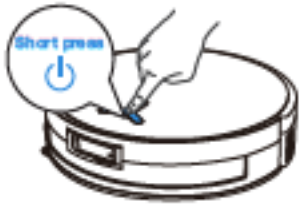

5. Back to Station

Use the ECOVACS HOME App or voice control to recall DEEBOT, or press and hold the ⏻ button on DEEBOT for 3 s, to allow DEEBOT to dock for charging.





6. Deep Sleep Mode

DEEBOT will enter deep sleep mode if it stays outside the station for about 10 h to protect the battery. Please switch OFF and ON to wake DEEBOT up.



When PowerBoost Charging is enabled, DEEBOT will fast charge for about 5 minutes after returning to the station. It will then switch to standard charging and stop automatically once fully charged.

REGULAR MAINTENANCE

❶ Maintenance Frequency

To keep DEEBOT running at peak performance, perform maintenance and replace parts at the following frequencies:

Part	Maintenance Frequency	Replacement Frequency
Washable Roller Mop	/	Every 1-2 months
Dirty Water Box	Every week	/
Drip Tray	Every week	/
Side Brush	Every 2 weeks	Every 3-6 months
Main Brush	Every week	Every 6-12 months
Filter	Every week	Every 3-6 months
Universal Wheel Anti-drop Sensors Bumper Charging Contacts on DEEBOT Charging Contacts on OMNI Station Navigation Module Navigation Module AM1 Camera	Approx. every month	/
Clean Water Tank	Every 3 months	/
Dirty Water Tank	Every month	/
Body and Bottom of the Station	Every month	/
Mop Washing Tray	Every 5 months	/
Cleaning Solution Unit	Every month	/
Dust Container	After each use	/
Dust Container Filter	Every 3-6 months	Every 3-6 months/ After multiple washes

Note: Explore more accessories at the ECOVACS HOME App or at https://www.ecovacs.com.

❷ DEEBOT Maintenance

1.Maintain Dust Bin and Filter

1. Remove the dust bin and then empty it.



2. Open the filter net and remove the filter.

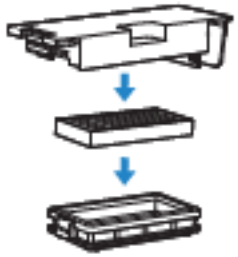

3. Rinse the dust bin and filter with water, and shake off the water droplets.



Note:
- Please rinse the filter with water as shown.
- Do not use fingers or brushes to clean the filter.

4. Air-dry the dust bin and filter.



Note: Completely dry the components before use.

2.Maintain Main Brush and Side Brush

Clean Main Brush

1. Remove the cover from the main brush.

Before turning DEEBOT upside down, please empty any remaining water from the dirty water tank and drip tray.

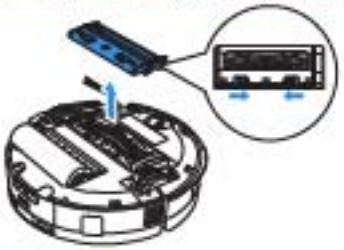

2. Remove and clean the main brush.



3. Remove, clean, and dry the brush comb.



4. Install the brush comb, main brush, and the cover.



Clean Side Brush

Remove the side brush using a screwdriver and clean it.



3. Maintain Roller Mop

Clean Roller Mop

1. Double tap ⏻ button to release the roller mop component.



Note: Do not pull the roller forcefully while it is retracted, as this may damage the roller mop component.

2. Press the lateral unlock button to remove the roller.



3. Clean the roller mop.

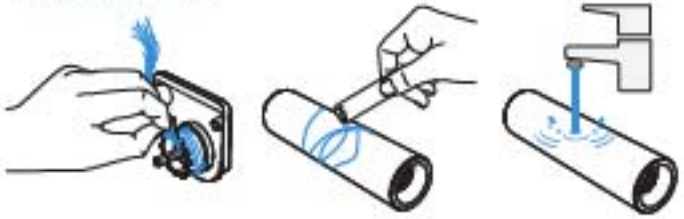

4. Clean inside the roller.



Note: Do not wash DEEBOT with water.

5. Push the roller mop into the roller end cover and double tap ⏻ button to retract.

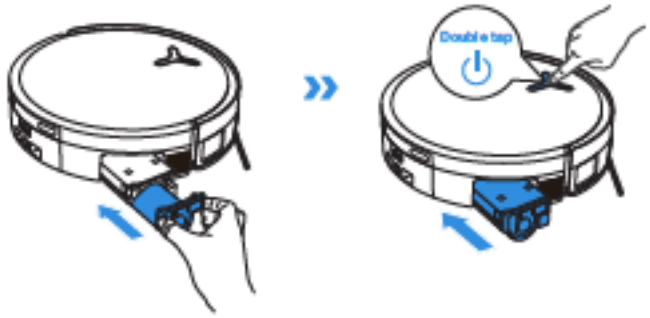

Note: Explore more accessories at the ECOVACS HOME App or at https://www.ecovacs.com.

4. Maintain Clean Drip Tray

1. Remove the drip tray.



Note: A small amount of residual water may leak out when flipping DEEBOT if it's not in drying mode.

2. Remove and clean drip tray components.



3. Please install the drip tray filter components as shown in the illustration.



5. Maintain Dirty Water Box

1. Remove the dirty water box and the filter net.



2. Clean the filter net, box, and sewage outlet.



3. Reinstall the filter, press securely, and then reattach the dirty water box cover.

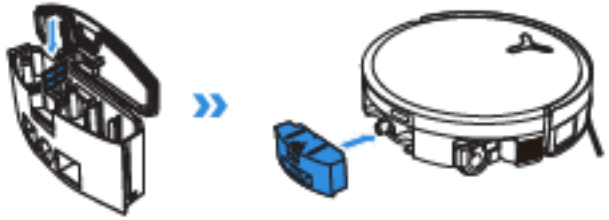

Press the dirty water box cover firmly in the guided direction until its plane is completely flush with the upper edge of the box to ensure a tight seal.

6.Maintain Other Components

Clean the Obstacle Avoidance Module Lens



Clean the Bumper



Clean the Navigation Module



Clean the Edge Sensor



Clean Charging Contacts

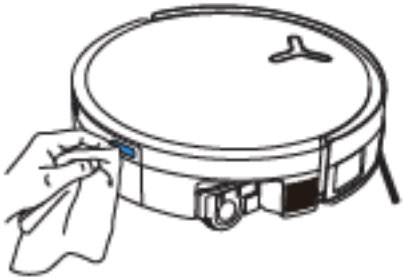

Note:
- Wipe the components with a clean, dry cloth. Never use a wet cloth. Do not use cleaning sprays or detergents, as moisture may cause damage.
- Charging contacts contain sensitive electronic components. Clean them with a dry cloth. Do not use a wet cloth to prevent water damage.

Clean the Anti-drop Sensors



Clean the Universal Wheel

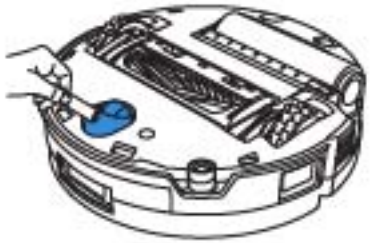

Clean the Driving Wheels

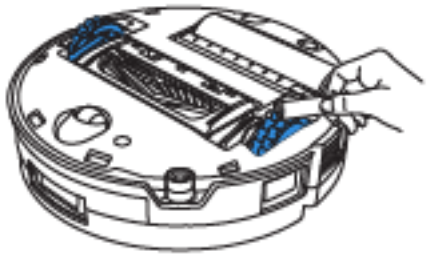

Note: Explore more accessories at the ECOVACS HOME App or at https://www.ecovacs.com.

③ Station Maintenance

1. Maintain Dust Container and its Filter

1. Press the container release button, and remove the dust container.



2. Hold the dust container with the bottom facing your trash can, press the dump switch, and the bottom cover of the dust container will open to dump the dust.



3. Twist off the top and remove the filter.

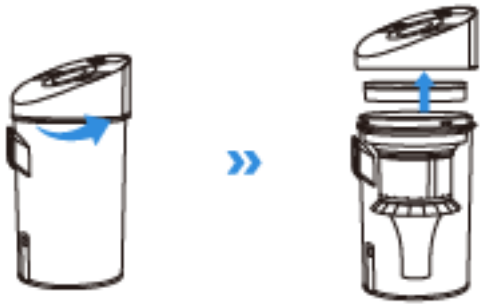

4. Remove the multi-cone structure.

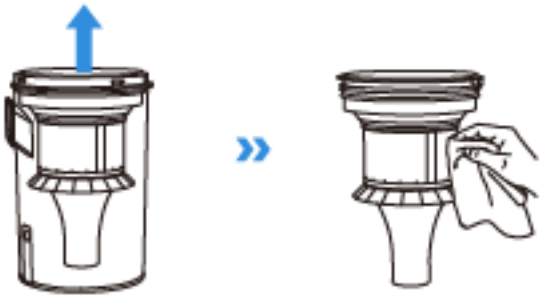

Note: It is not recommended to wash the multi-cone structure. If needed, you can use a wet cloth to wipe it and let it air-dry.

5. Rinse the container with water or wipe it with a wet cloth.



Note: Please make sure to air-dry the dust container before using it again.

6. Rinse the dust container and sponge filter with water and dry them.

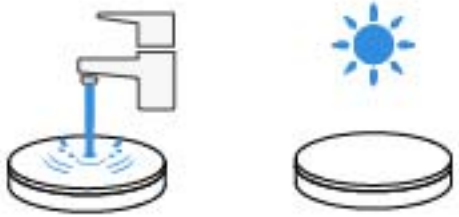

Note: Completely dry the filter before use.

2. Maintain Mop Washing Tray

1. Remove and clean the mop washing tray and the station base.



2. Remove and clean the soaking tray.



3. Install the soaking tray.



4. Install the mop washing tray and base.

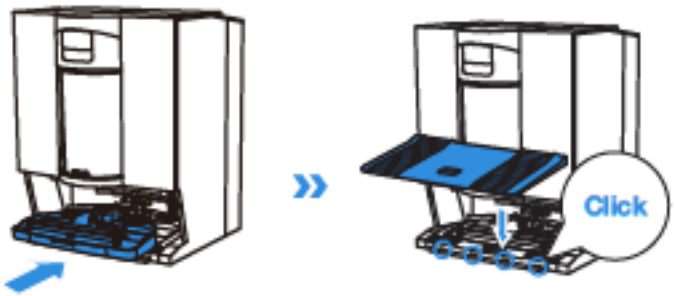

Note: Please install the tray and base properly to prevent malfunction.

4 Storage

Please fully charge and switch OFF DEEBOT before storage. Please recharge it every 1.5 months to prevent the battery from over-discharging.



Please note that DEEBOT cannot charge when powered OFF.

Note:

- After DEEBOT finishes its cleaning task, it is recommended not to power it off but to keep it charging, to better prepare for the next cleaning session.
- If the battery is over-discharged or not used for a long time, DEEBOT may not be charged. Please contact ECOVACS for help. Do not disassemble the battery by yourself.
- If you do not use the product for a long time, keep the dirty water box, water tanks empty and the mop dry.

TROUBLESHOOTING

For the following possible issues, refer to the corresponding solutions.

No.	Malfunction	Possible Cause	Solution
1	DEEBOT is not able to connect to the ECOVACS HOME App.	Incorrect Wi-Fi username or password entered.	Enter the correct Wi-Fi username and password.
		DEEBOT is not within range of your home Wi-Fi signal.	Make sure DEEBOT is within range of your home Wi-Fi signal. Try to stay as close to the router as possible.
		DEEBOT is not in the configuration state.	Press the Reset button to connect DEEBOT to your phone by Bluetooth. If it fails, please press the Reset button + ⏻, and connect via the ECOVACS HOME App.
		There is no home Wi-Fi on the Wi-Fi list.	1. Check if the Wi-Fi name contains special characters. Please do not use special characters like ! @& ¥%/\. 2. Do not use a 5 GHz network.
		An incorrect App is installed.	Please download and install the ECOVACS HOME App.
2	Unable to create the furniture map in the App.	Moving DEEBOT when cleaning might cause the map to be lost.	During cleaning, do not move DEEBOT.
		Auto cleaning is not finished.	Make sure DEEBOT automatically returns to the OMNI Station after cleaning.
		Multi-floor mode was not enabled when the second map was created.	Please enable multi-floor mode in the App.
3	The side brush drops out of place during use.	The side brush is not properly installed.	When installing the side brush with a screwdriver, ensure the screw is tightened securely.
4	No signal found. Unable to return to the station.	The OMNI Station is incorrectly placed.	Place the station properly according to the instructions in the [Power on and Charge DEEBOT] section.
		The OMNI Station is out of power or has been moved.	Check whether the OMNI Station is connected to the power supply. Do not move the OMNI Station.
		DEEBOT does not start cleaning from the OMNI Station.	It is recommended that DEEBOT start cleaning from the OMNI Station.
		The docking route is blocked. For example, the door is closed to the room where the OMNI Station is placed.	Keep the charging route clear.
5	DEEBOT returns to the OMNI Station before it has finished cleaning.	The room is so large that DEEBOT needs to return to recharge.	Please enable auto-resume. For more details, please follow the App instructions.
		In highly complex home layouts, cleaning efficiency may decrease, possibly resulting in incomplete cleaning.	Simplify your home layout.

No.	Malfunction	Possible Cause	Solution
6	DEEBOT is unable to charge.	DEEBOT is not switched ON.	Switch ON DEEBOT.
		DEEBOT's charging contacts are not connected to the OMNI station's charging contacts.	Make sure that DEEBOT's charging contacts have connected to the station's charging contacts and ⏻ flashes. Check whether DEEBOT's and OMNI station's charging contacts are dirty. Please clean these parts according to the instructions in the [REGULAR MAINTENANCE] section.
		The OMNI Station is not connected to the power supply.	1. Make sure the OMNI station is connected to power supply. 2. Once the power is connected, ensure that the motor startup sound can be heard.
		The base has not been installed in place.	Refer to the [Quick Start] section for correct installation.
7	DEEBOT is very loud during cleaning.	The main brush/side brush is tangled, or the dust bin/filter is blocked.	It is recommended to clean the main brush, side brush, dust bin, roller mop, filter, etc., regularly.
		DEEBOT is in Strong Suction Mode or Max Suction Power Mode.	Switch to Standard Mode.
8	DEEBOT gets stuck while working and stops.	DEEBOT is tangled with objects on the floor (electrical wires, curtains, carpet fringing, etc.).	DEEBOT will try various ways to free itself. If its attempts fail, manually remove the obstacles and restart.
		DEEBOT might be stuck under furniture with an entrance of similar height.	Please raise the furniture, set a physical barrier, or set a virtual boundary via the ECOVACS HOME App.
		DEEBOT is stuck in a narrow area.	Tidy up your home, set a physical barrier, or set a virtual boundary via the ECOVACS HOME App.
9	During cleaning, DEEBOT may encounter issues like a disorderly route, biased movement, repeated cleaning over the same spots, and missing small areas. (If there is a large area that has not been cleaned temporarily, DEEBOT will automatically clean the missed area. Sometimes DEEBOT will re-enter a cleaned room, which may not be repeated cleaning, but DEEBOT finds any missed area.)	Objects such as wires and slippers placed on the ground block DEEBOT.	Before cleaning, please tidy up scattered wires, slippers, and other objects on the ground as much as possible. If there is any area missed during cleaning, DEEBOT will correct it automatically. Please refrain from interfering (such as moving DEEBOT or blocking its route).
		The driving wheels may slip on the ground when DEEBOT climbs steps, thresholds, and door bars, which can affect its judgment of the entire home environment.	It is recommended to close the door of the affected area and clean it separately. After cleaning, DEEBOT will return to its starting location.
		On freshly waxed or polished floors, as well as smooth tiles, there may be less friction between the driving wheels and the floor.	Please wait for the wax to dry before cleaning.
		Due to variations in home layouts, some areas cannot be entered by DEEBOT.	Tidy up your home to ensure that DEEBOT can enter the areas to be cleaned.

No.	Malfunction	Possible Cause	Solution
10	Delay in remote control.	The Wi-Fi signal is poor, causing the video loading to be slow.	Use DEEBOT in areas with a good Wi-Fi signal.
11	After returning to the OMNI station, DEEBOT does not empty its dust bin.	The Auto-Empty function has not been turned on in the ECOVACS HOME App.	Turn on the Auto-Empty function in the ECOVACS HOME App.
		Manually moving DEEBOT back to the station will not trigger the Auto-Empty function.	It is recommended that DEEBOT be allowed to return to the OMNI Station on its own. Please do not manually move it.
		In Do Not Disturb mode, DEEBOT will not empty the dust after returning to the OMNI Station.	Turn off Do Not Disturb in the ECOVACS HOME App or manually start dust-emptying.
		The station detects a decrease in empty efficiency.	Clean the dust container and the sponge filter according to the [REGULAR MAINTENANCE] section, close the dust collection correctly, and install it in the station.
		Check if the dust bin is full and causes a blockage.	Clean the dust bin according to the [REGULAR MAINTENANCE] section.
		If the above possible causes have been ruled out, components of the station may be abnormal.	Please contact customer service for assistance.
12	Auto-Empty unsuccessful.	The station detects a decrease in empty efficiency.	Clean the dust container and the sponge filter according to the [REGULAR MAINTENANCE] section, close the dust collection correctly, and install it in the station.
		The outlet of the dust bin is blocked by foreign objects.	Remove the dust bin and clear the foreign objects on the outlet.
		The dust container is not properly installed or firmly closed.	Install the dust container correctly and close it firmly.
13	Dust leakage occurs while DEEBOT is working.	The outlet of the dust bin is blocked by foreign objects.	Remove the dust bin and clear the foreign objects on the outlet.
14	The roller mop does not rotate.	The roller mop is not correctly installed.	Install the roller mop properly according to the [REGULAR MAINTENANCE] section.
		The roller mop is blocked by foreign objects.	Clean and install the roller mop properly according to the [REGULAR MAINTENANCE] section.
15	The driving wheel is stuck.	The driving wheel is entangled or stuck due to foreign objects.	Rotate and press the driving wheel to check for any wrapping or obstruction by foreign objects. If any foreign objects are found, please clean them promptly. If this issue persists, please contact customer service for assistance.

No.	Malfunction	Possible Cause	Solution
16	The mop washing tray is full of water and cannot be emptied. A voice prompt reports the mop washing tray malfunction.	The dirty water tank is not properly installed.	Tap down on the dirty water tank to ensure it is properly installed.
		The sealing plugs in the dirty water tank are not installed properly.	Make sure that the two sealing plugs are properly installed.
		The mop washing tray is not properly installed.	Check and ensure the mop washing tray is properly installed.
		The mop washing tray base gets dirty.	Detach and wash the mop washing tray base with water.
		Check if the floating ball gets stuck when there is no water in the mop washing tray base.	Take out the mop washing tray to put the floating ball back in place.
		The OMNI Station cannot drain water normally.	Place DEEBOT in the station. After ensuring it's charging, double tap ⏻. If the issue persists, please contact customer service for assistance.
		The suction port of the mop washing tray is blocked by foreign objects.	Ensure that there is no foreign object in the suction part of the mop washing tray.
		The voice alert persists after all the above solutions are tried.	Power off and on the station. If this issue persists, please contact customer service for assistance.
17	Dirty water box malfunction or frequent auto-wash.	The dirty water box is overly laden with dust.	Remove and empty the dirty water box, and then rinse it and reinstall. If this issue persists, please contact customer service for assistance.
		The drip tray is overly laden with dust.	Remove and empty the drip tray, and then rinse it and reinstall. If this issue persists, please contact customer service for assistance.

TECHNICAL SPECIFICATIONS

Model	DEX99-1		
Rated Input	16.4V ⎓ 3A	Fast Charge Input	16.4V ⎓ 9.5A
Charging Time	About 4 h		
Station Model	CH2812		
Rated Input	220-240V ~ 50-60Hz		
Nominal charge output	16.4V ⎓ 3A	Fast Charge Output (Short time)	16.4V ⎓ 9.5A
Rated Input Current(Charging)	1.5A		
Power(Emptying)	650W		
Power(Hot Water Washing Mop)	2200W		
Frequency Bands	2400-2483.5 MHz		
Networked Standby Power	Less than 2.00 W		

Output power of the wireless module is less than 100 mW.
Based on product requirements (functionality and user experience), our products use a non-ultra-low power appliance architecture, so there is no off mode and no standby mode. After the machine is fully charged, it will enter the network standby mode within 20 minutes. Networked standby mode power is 1.9 W.
Note: Technical and design specifications may be changed for continuous product improvement.
Explore more accessories at https://www.ecovacs.com.



Please use the mobile camera to scan the QR code and obtain the user guide.