Canon

G3070 series

Online Manual

English

Contents

Using Online Manual. 10

Symbols Used in This Document. 11

Touch-enabled Device Users (Windows). 12

Trademarks and Licenses. 13

Trademarks. 14

Licenses. 15

Easy Understanding Network Connections. 35

Restrictions. 38

Network Connection Tips (Windows/macOS). 40

Detect Same Printer Name. 41

Switching Printer's Connection to Network or Devices. 42

Wi-Fi Connection Assistant (Windows). 43

Wi-Fi Connection Assistant. 44

Starting Up Wi-Fi Connection Assistant. 45

Diagnosing and Repairing Network Settings. 46

Performing/Changing Network Settings. 47

Canon Wi-Fi Connection Assistant Screen. 48

Performing Network Settings. 52

Performing/Changing Wi-Fi Settings. 53

Assigning Printer Information. 58

List of Models Which Does Not Support Diagnosis and Repair Function. 59

List of Models Which Does Not Support IPv6 Configuration via USB Connection. 60

Wi-Fi Connection Assistant (macOS). 62

Wi-Fi Connection Assistant. 63

Starting Up Wi-Fi Connection Assistant. 64

Diagnosing and Repairing Network Settings. 65

List of Models Which Does Not Support Diagnosis and Repair Function. 66

Handling Paper, Originals, Ink Tanks, etc.. 67

Loading Paper. 68

Loading Photo Paper / Plain Paper. 69

Loading Envelopes. 74

Loading Originals. 78
Loading Originals on Platen. 79
Loading Based on Use. 81
Supported Originals. 84
How to Detach / Attach the Document Cover. 85
Refilling Ink Tanks. 87
Refilling Ink Tanks. 88
Checking Ink Level. 94
Ink Tips. 95
If Printing Is Faint or Uneven. 96
Maintenance Procedure. 97
Printing the Nozzle Check Pattern. 99
Examining the Nozzle Check Pattern. 100
Cleaning the Print Head. 102
Deep Print Head Cleaning. 104
Aligning the Print Head. 106
Performing Maintenance Functions from Your Computer (macOS). 109
Opening Remote UI for Maintenance. 110
Cleaning the Print Heads. 111
Adjusting Print Head Position. 113
Cleaning. 114
Cleaning Paper Feed Rollers. 115
Cleaning Inside the Printer (Bottom Plate Cleaning). 117
Replacing the Maintenance Cartridge. 120
Checking Maintenance Cartridge Status on LCD. 123
Overview. 124
Safety. 125
Safety Precautions. 126
Regulatory Information. 129
WEEE. 131
Handling Precautions. 142
Legal Restrictions on Scanning/Copying. 143
Printer Handling Precautions. 144

Transporting Your Printer. 145
When Repairing, Lending, or Disposing of the Printer. 147
Keeping Print Quality High. 148

Main Components and Their Use. 149

Main Components. 150

Front View. 151
Rear View. 153
Inside View. 154
Operation Panel. 155

Power Supply. 157

Checking that Power Is On. 158
Turning the Printer On and Off. 159
Unplugging the Printer. 161

LCD and Operation Panel. 162
Entering Numbers, Letters, and Symbols. 164

Changing Settings. 165

Changing Printer Settings from Your Computer (Windows). 166

Changing the Print Options. 167
Setting the Ink to be Used. 168
Managing the Printer Power. 169
Changing the Printer Operation Mode. 171

Changing Printer Settings from Your Computer (macOS). 173

Managing the Printer Power. 174
Changing the Printer Operation Mode. 175

Changing Settings from Operation Panel. 176

Changing Settings from Operation Panel. 177
Setting Items on Operation Panel. 178
Print settings. 179
LAN settings. 180
Other device settings. 185
Language selection. 187
Firmware update. 188
Reset settings. 189
Feed settings. 190
Web service setup. 191

ECO settings. 192
Quiet setting. 193
System information. 194
Checking the Total Number of Uses of Printer. 195
Specifications. 196
Information about Paper. 199
Supported Media Types. 200
Paper Load Limit. 203
Unsupported Media Types. 205
Handling Paper. 206
Economy Mode. 207
Printing. 208
Printing from Computer. 209
Printing from Application Software (Windows Printer Driver). 210
Basic Printing Setup. 211
Main Controls (Basic Settings Tab). 213
Basic Settings Tab Description. 214
Paper Settings on the Printer Driver and the Printer (Media Type). 222
Paper Settings on the Printer Driver and the Printer (Paper Size). 224
Printing on Postcards. 226
Setting Up Envelope Printing. 227
Registering a Frequently Used Printing Profile. 228
Set Media Type, Quality, etc. (Media/Quality Tab). 230
Media/Quality Tab Description. 231
Set the Layout of Printed Documents (Page Setup Tab). 235
Page Setup Tab Description. 236
Setting the Number of Copies and Printing Order. 248
Perform Borderless Printing. 250
Page Layout Printing. 252
Duplex Printing. 253
Overview of the Printer Driver. 254
Canon IJ Printer Driver. 255
Opening Printer Driver's Setup Screen. 256

Canon IJ Status Monitor. 257
Instructions for Use (Printer Driver). 258
Maintenance Tab Description. 260
Canon IJ Status Monitor Description. 263
Updating the Driver. 266
Printing from Application Software (macOS AirPrint). 268
Printing. 269
Perform Borderless Printing. 272
Printing on Postcards. 274
Adding Printer. 275
How to Open Printer Settings Screen. 276
Displaying the Printing Status Screen. 277
Deleting the Undesired Print Job. 278
Removing Printer That Is No Longer Required from List of Printers. 279
Printing Using Canon Application Software. 280
Printing from Smartphone/Tablet. 281
Paper Settings. 282
Copying. 284
Making Copies. 285
Setting Items for Copying. 286
Scanning. 288
Scanning in Windows. 289
Scanning According to Item Type or Purpose (IJ Scan Utility). 291
IJ Scan Utility Features. 292
Scanning Easily (Auto Scan). 294
Scanning Documents and Photos. 295
Creating/Editing PDF Files. 296
Scanning Using Application Software (ScanGear). 300
What Is ScanGear (Scanner Driver)?. 301
Starting ScanGear (Scanner Driver). 303
Scanning in Basic Mode. 304
ScanGear (Scanner Driver) Screens. 307
Basic Mode Tab. 308
Advanced Mode Tab. 316

General Notes (Scanner Driver). 322
Scanning Tips. 324
Positioning Originals (Scanning from Computer). 325
Network Scan Settings. 329
Scanning in macOS. 333
Scanning According to Item Type or Purpose (IJ Scan Utility Lite). 334
IJ Scan Utility Lite Features. 335
Scanning Easily (Auto Scan). 337
Scanning Documents and Photos. 338
Scanning Tips. 339
Positioning Originals (Scanning from Computer). 340
Frequently Asked Questions. 345
Network FAQ. 348
Network Communication Problems. 350
Cannot Find Printer on Network (Windows/macOS). 351
Cannot Find Printer on Network. 352
Cannot Proceed Beyond Printer Connection Screen (Cannot Find Printer Connected via USB). 356
Wireless Router Problems. 358
Network Key (Password) Unknown. 359
Printer Cannot Be Used After Replacing Wireless Router or Changed Router Settings. 361
Printer Settings/Smartphone/Tablet Troubles for Network. 363
Solve Network Troubles with The Printer's Diagnostic Functions. 364
Checking Network Information of Printer. 371
Printing Network Settings. 374
Restoring Printer's LAN Settings to Defaults. 379
Default Network Settings. 380
Connecting with Wireless Direct. 382
Problems While Printing (Scanning) from Smartphone/Tablet. 386
Cannot Print (Scan) from Smartphone/Tablet. 387
Printing Problems. 391
Printer Does Not Print. 392
Printer Does Not Pick Up or Feed the Paper/"No Paper" Error. 395
Printout (Copy) Results Are Unsatisfactory. 398

Ink Does Not Come Out/Blurry or Fuzzy/Inaccurate or Bleeding Colors/Streaks. 401
Lines Are Misaligned/Distorted. 404
Paper Is Smudged/Printed Surface Is Scratched/Ink Blots/Paper Curl. 405
Vertical Line Next to Image. 408
Images Incomplete/Cannot Complete Printing. 409
Lines Incomplete or Missing (Windows). 410
Back of Paper Is Smudged. 411
Uneven or Streaked Colors. 412
Change to Offline (Windows). 413
Scanning Problems (Windows). 415
Scanning Problems. 416
Scanner Does Not Work. 417
ScanGear (Scanner Driver) Does Not Start. 418
Scanning Problems (macOS). 419
Scanning Problems. 420
Scanner Does Not Work. 421
Scanner Driver Does Not Start. 422
Mechanical Problems. 423
Printer Does Not Turn On. 424
Printer Turns Off Unexpectedly or Repeatedly. 425
USB Connection Problems. 426
Wrong Language Appears in LCD. 428
Installation and Download Problems. 429
Failed to MP Drivers (Printer Driver) Installation (Windows). 430
Cannot Proceed Beyond Printer Connection Screen (Cannot Find Printer Connected via USB). 356
Updating MP Drivers (Printer Driver) in Network Environment (Windows). 433
Errors and Messages. 434
When Error Occurred. 435
Message Is Displayed. 437
List of Support Codes for Printer Errors. 439
What to Do When Paper Is Jammed. 441
Removing Jammed Paper inside Printer. 444
1000. 448

1200. 449
1368. 450
1496. 451
1640. 452
1723. 453
1724. 454
1725. 455
1726. 456
1727. 457
2114. 458
2200. 463
2900. 464
2901. 465
3252. 466
4103. 467
5100. 468
5200. 469
6000. 470

Using Online Manual

- Operating Environment
- Symbols Used in This Document
- Touch-enabled Device Users (Windows)
- Printing Online Manual
- Trademarks and Licenses
- Screenshots in This Manual

Symbols Used in This Document

Warning

Instructions that, if ignored, could result in death, serious personal injury, or property damage caused by incorrect operation of the equipment. These must be observed for safe operation.

Caution

Instructions that, if ignored, could result in personal injury or property damage caused by incorrect operation of the equipment. These must be observed for safe operation.

Important

Instructions including important information that must be observed to avoid damage and injury or improper use of the product. Be sure to read these instructions.

Note

Instructions including notes for operation and additional explanations.

Basics

Instructions explaining basic operations of your product.

Note

- Icons may vary depending on your product.

Touch-enabled Device Users (Windows)

For touch actions, you need to replace "right-click" in this document with the action set on the operating system. For example, if the action is set to "press and hold" on your operating system, replace "right-click" with "press and hold."

Trademarks and Licenses

- Trademarks
- Licenses

Trademarks

- Microsoft is a registered trademark of Microsoft Corporation.
- Windows is a trademark or registered trademark of Microsoft Corporation in the U.S. and/or other countries.
- Microsoft Edge and Microsoft Excel are either trademarks or registered trademarks of Microsoft Corporation in the U.S. and/or other countries.
- Internet Explorer is a trademark or registered trademark of Microsoft Corporation in the U.S. and/or other countries.
- Microsoft Store is a trademark or registered trademark of Microsoft Corporation in the U.S. and/or other countries.
- This device incorporates exFAT technology licensed from Microsoft.
- Mac, Mac OS, macOS, OS X, AirPort, App Store, AirPrint, the AirPrint logo, Safari, Bonjour, iPad, iPad Air, iPad mini, iPadOS, iPhone and iPod touch are trademarks of Apple Inc., registered in the U.S. and other countries.
- IOS is a trademark or registered trademark of Cisco in the U.S. and other countries and is used under license.
- Google Cloud Print, Google Chrome, Chrome OS, Chromebook, Android, Google Drive, Google Apps and Google Analytics are either registered trademarks or trademarks of Google Inc. Google Play and Google Play Logo are trademarks of Google LLC.
- Adobe, Acrobat, Flash, Photoshop, Illustrator, Adobe RGB and Adobe RGB (1998) are either registered trademarks or trademarks of Adobe Systems Incorporated in the United States and/or other countries.
- Adobe, Acrobat, Flash, Photoshop, Photoshop Elements, Lightroom, Adobe RGB and Adobe RGB (1998) are either registered trademarks or trademarks of Adobe Systems Incorporated in the United States and/or other countries.
- Amazon, Echo and Alexa are trademarks of Amazon.com, Inc. or its affiliates.
- Google, Google Home, and Android are trademarks of Google LLC.
- LINE is a registered trademark or trademark of LINE Corporation.
- LINE Clova is a registered trademark of LINE Corporation.
- Google Docs, and Google Drive are trademarks of Google LLC.
- App Store is a trademark of Apple Inc., registered in the U.S. and other countries.
- Bluetooth is a trademark of Bluetooth SIG, Inc., U.S.A. and licensed to Canon Inc.
- QR Code is a registered trademark of DENSO WAVE INCORPORATED in Japan and in other countries.
- The Mopria® word mark and the Mopria® Logo are registered and/or unregistered trademarks of Mopria Alliance, Inc. in the United States and other countries. Unauthorized use is strictly prohibited.
- Mozilla Firefox is a trademark or registered trademark of Mozilla Foundation in the U.S. and/or other countries.
- Wi-Fi, WPA, WPA2 and WPA3 are either registered trademarks or trademarks of Wi-Fi Alliance.
- All other company names and products mentioned in this guide may be registered trademarks or trademarks of their respective companies.

Licenses

Copyright (c) 2003-2015 Apple Inc. All rights reserved.

Redistribution and use in source and binary forms, with or without modification, are permitted provided that the following conditions are met:

1. Redistributions of source code must retain the above copyright notice, this list of conditions and the following disclaimer.
2. Redistributions in binary form must reproduce the above copyright notice, this list of conditions and the following disclaimer in the documentation and/or other materials provided with the distribution.
3. Neither the name of Apple Inc. ("Apple") nor the names of its contributors may be used to endorse or promote products derived from this software without specific prior written permission.

THIS SOFTWARE IS PROVIDED BY APPLE AND ITS CONTRIBUTORS "AS IS" AND ANY EXPRESS OR IMPLIED WARRANTIES, INCLUDING, BUT NOT LIMITED TO, THE IMPLIED WARRANTIES OF MERCHANTABILITY AND FITNESS FOR A PARTICULAR PURPOSE ARE DISCLAIMED. IN NO EVENT SHALL APPLE OR ITS CONTRIBUTORS BE LIABLE FOR ANY DIRECT, INDIRECT, INCIDENTAL, SPECIAL, EXEMPLARY, OR CONSEQUENTIAL DAMAGES (INCLUDING, BUT NOT LIMITED TO, PROCUREMENT OF SUBSTITUTE GOODS OR SERVICES; LOSS OF USE, DATA, OR PROFITS; OR BUSINESS INTERRUPTION) HOWEVER CAUSED AND ON ANY THEORY OF LIABILITY, WHETHER IN CONTRACT, STRICT LIABILITY, OR TORT (INCLUDING NEGLIGENCE OR OTHERWISE) ARISING IN ANY WAY OUT OF THE USE OF THIS SOFTWARE, EVEN IF ADVISED OF THE POSSIBILITY OF SUCH DAMAGE.

Apache License

Version 2.0, January 2004

http://www.apache.org/licenses/
TERMS AND CONDITIONS FOR USE, REPRODUCTION, AND DISTRIBUTION

1. Definitions.

   "License" shall mean the terms and conditions for use, reproduction, and distribution as defined by Sections 1 through 9 of this document.

   "Licensor" shall mean the copyright owner or entity authorized by the copyright owner that is granting the License.

   "Legal Entity" shall mean the union of the acting entity and all other entities that control, are controlled by, or are under common control with that entity. For the purposes of this definition, "control" means (i) the power, direct or indirect, to cause the direction or management of such entity, whether by contract or otherwise, or (ii) ownership of fifty percent (50%) or more of the outstanding shares, or (iii) beneficial ownership of such entity.

   "You" (or "Your") shall mean an individual or Legal Entity exercising permissions granted by this License.

   "Source" form shall mean the preferred form for making modifications, including but not limited to software source code, documentation source, and configuration files.

"Object" form shall mean any form resulting from mechanical transformation or translation of a Source form, including but not limited to compiled object code, generated documentation, and conversions to other media types.

"Work" shall mean the work of authorship, whether in Source or Object form, made available under the License, as indicated by a copyright notice that is included in or attached to the work (an example is provided in the Appendix below).

"Derivative Works" shall mean any work, whether in Source or Object form, that is based on (or derived from) the Work and for which the editorial revisions, annotations, elaborations, or other modifications represent, as a whole, an original work of authorship. For the purposes of this License, Derivative Works shall not include works that remain separable from, or merely link (or bind by name) to the interfaces of, the Work and Derivative Works thereof.

"Contribution" shall mean any work of authorship, including the original version of the Work and any modifications or additions to that Work or Derivative Works thereof, that is intentionally submitted to Licensor for inclusion in the Work by the copyright owner or by an individual or Legal Entity authorized to submit on behalf of the copyright owner. For the purposes of this definition, "submitted" means any form of electronic, verbal, or written communication sent to the Licensor or its representatives, including but not limited to communication on electronic mailing lists, source code control systems, and issue tracking systems that are managed by, or on behalf of, the Licensor for the purpose of discussing and improving the Work, but excluding communication that is conspicuously marked or otherwise designated in writing by the copyright owner as "Not a Contribution."

"Contributor" shall mean Licensor and any individual or Legal Entity on behalf of whom a Contribution has been received by Licensor and subsequently incorporated within the Work.

2. Grant of Copyright License. Subject to the terms and conditions of this License, each Contributor hereby grants to You a perpetual, worldwide, non-exclusive, no-charge, royalty-free, irrevocable copyright license to reproduce, prepare Derivative Works of, publicly display, publicly perform, sublicense, and distribute the Work and such Derivative Works in Source or Object form.
3. Grant of Patent License. Subject to the terms and conditions of this License, each Contributor hereby grants to You a perpetual, worldwide, non-exclusive, no-charge, royalty-free, irrevocable (except as stated in this section) patent license to make, have made, use, offer to sell, sell, import, and otherwise transfer the Work, where such license applies only to those patent claims licensable by such Contributor that are necessarily infringed by their Contribution(s) alone or by combination of their Contribution(s) with the Work to which such Contribution(s) was submitted. If You institute patent litigation against any entity (including a cross-claim or counterclaim in a lawsuit) alleging that the Work or a Contribution incorporated within the Work constitutes direct or contributory patent infringement, then any patent licenses granted to You under this License for that Work shall terminate as of the date such litigation is filed.
4. Redistribution. You may reproduce and distribute copies of the Work or Derivative Works thereof in any medium, with or without modifications, and in Source or Object form, provided that You meet the following conditions:

    1. You must give any other recipients of the Work or Derivative Works a copy of this License; and
    2. You must cause any modified files to carry prominent notices stating that You changed the files; and

3. You must retain, in the Source form of any Derivative Works that You distribute, all copyright, patent, trademark, and attribution notices from the Source form of the Work, excluding those notices that do not pertain to any part of the Derivative Works; and
4. If the Work includes a "NOTICE" text file as part of its distribution, then any Derivative Works that You distribute must include a readable copy of the attribution notices contained within such NOTICE file, excluding those notices that do not pertain to any part of the Derivative Works, in at least one of the following places: within a NOTICE text file distributed as part of the Derivative Works; within the Source form or documentation, if provided along with the Derivative Works; or, within a display generated by the Derivative Works, if and wherever such third-party notices normally appear. The contents of the NOTICE file are for informational purposes only and do not modify the License. You may add Your own attribution notices within Derivative Works that You distribute, alongside or as an addendum to the NOTICE text from the Work, provided that such additional attribution notices cannot be construed as modifying the License.

   You may add Your own copyright statement to Your modifications and may provide additional or different license terms and conditions for use, reproduction, or distribution of Your modifications, or for any such Derivative Works as a whole, provided Your use, reproduction, and distribution of the Work otherwise complies with the conditions stated in this License.

5. Submission of Contributions. Unless You explicitly state otherwise, any Contribution intentionally submitted for inclusion in the Work by You to the Licensor shall be under the terms and conditions of this License, without any additional terms or conditions. Notwithstanding the above, nothing herein shall supersede or modify the terms of any separate license agreement you may have executed with Licensor regarding such Contributions.
6. Trademarks. This License does not grant permission to use the trade names, trademarks, service marks, or product names of the Licensor, except as required for reasonable and customary use in describing the origin of the Work and reproducing the content of the NOTICE file.
7. Disclaimer of Warranty. Unless required by applicable law or agreed to in writing, Licensor provides the Work (and each Contributor provides its Contributions) on an "AS IS" BASIS, WITHOUT WARRANTIES OR CONDITIONS OF ANY KIND, either express or implied, including, without limitation, any warranties or conditions of TITLE, NON-INFRINGEMENT, MERCHANTABILITY, or FITNESS FOR A PARTICULAR PURPOSE. You are solely responsible for determining the appropriateness of using or redistributing the Work and assume any risks associated with Your exercise of permissions under this License.
8. Limitation of Liability. In no event and under no legal theory, whether in tort (including negligence), contract, or otherwise, unless required by applicable law (such as deliberate and grossly negligent acts) or agreed to in writing, shall any Contributor be liable to You for damages, including any direct, indirect, special, incidental, or consequential damages of any character arising as a result of this License or out of the use or inability to use the Work (including but not limited to damages for loss of goodwill, work stoppage, computer failure or malfunction, or any and all other commercial damages or losses), even if such Contributor has been advised of the possibility of such damages.
9. Accepting Warranty or Additional Liability. While redistributing the Work or Derivative Works thereof, You may choose to offer, and charge a fee for, acceptance of support, warranty, indemnity, or other liability obligations and/or rights consistent with this License. However, in accepting such obligations, You may act only on Your own behalf and on Your sole responsibility, not on behalf of any other Contributor, and only if You agree to indemnify, defend, and hold each Contributor harmless for any liability incurred by, or claims asserted against, such Contributor by reason of your accepting any

such warranty or additional liability.
END OF TERMS AND CONDITIONS

---- Part 1: CMU/UCD copyright notice: (BSD like) -----

Copyright 1989, 1991, 1992 by Carnegie Mellon University

Derivative Work - 1996, 1998-2000

Copyright 1996, 1998-2000 The Regents of the University of California

All Rights Reserved

Permission to use, copy, modify and distribute this software and its documentation for any purpose and without fee is hereby granted, provided that the above copyright notice appears in all copies and that both that copyright notice and this permission notice appear in supporting documentation, and that the name of CMU and The Regents of the University of California not be used in advertising or publicity pertaining to distribution of the software without specific written permission.

CMU AND THE REGENTS OF THE UNIVERSITY OF CALIFORNIA DISCLAIM ALL WARRANTIES WITH REGARD TO THIS SOFTWARE, INCLUDING ALL IMPLIED WARRANTIES OF MERCHANTABILITY AND FITNESS. IN NO EVENT SHALL CMU OR THE REGENTS OF THE UNIVERSITY OF CALIFORNIA BE LIABLE FOR ANY SPECIAL, INDIRECT OR CONSEQUENTIAL DAMAGES OR ANY DAMAGES WHATSOEVER RESULTING FROM THE LOSS OF USE, DATA OR PROFITS, WHETHER IN AN ACTION OF CONTRACT, NEGLIGENCE OR OTHER TORTIOUS ACTION, ARISING OUT OF OR IN CONNECTION WITH THE USE OR PERFORMANCE OF THIS SOFTWARE.

---- Part 2: Networks Associates Technology, Inc copyright notice (BSD) -----

Copyright (c) 2001-2003, Networks Associates Technology, Inc

All rights reserved.

Redistribution and use in source and binary forms, with or without modification, are permitted provided that the following conditions are met:

* Redistributions of source code must retain the above copyright notice, this list of conditions and the following disclaimer.
* Redistributions in binary form must reproduce the above copyright notice, this list of conditions and the following disclaimer in the documentation and/or other materials provided with the distribution.
* Neither the name of the Networks Associates Technology, Inc nor the names of its contributors may be used to endorse or promote products derived from this software without specific prior written permission.

THIS SOFTWARE IS PROVIDED BY THE COPYRIGHT HOLDERS AND CONTRIBUTORS ``AS IS'' AND ANY EXPRESS OR IMPLIED WARRANTIES, INCLUDING, BUT NOT LIMITED TO, THE IMPLIED WARRANTIES OF MERCHANTABILITY AND FITNESS FOR A PARTICULAR PURPOSE ARE DISCLAIMED. IN NO EVENT SHALL THE COPYRIGHT HOLDERS OR CONTRIBUTORS BE LIABLE FOR ANY DIRECT, INDIRECT, INCIDENTAL, SPECIAL, EXEMPLARY, OR CONSEQUENTIAL DAMAGES (INCLUDING, BUT NOT LIMITED TO, PROCUREMENT OF SUBSTITUTE GOODS OR SERVICES; LOSS OF USE, DATA, OR PROFITS; OR BUSINESS INTERRUPTION) HOWEVER CAUSED AND ON ANY THEORY OF LIABILITY, WHETHER IN CONTRACT, STRICT LIABILITY, OR TORT (INCLUDING NEGLIGENCE OR OTHERWISE) ARISING IN ANY WAY OUT OF THE USE OF THIS SOFTWARE, EVEN IF ADVISED OF THE POSSIBILITY OF SUCH DAMAGE.

---- Part 3: Cambridge Broadband Ltd. copyright notice (BSD) -----

Portions of this code are copyright (c) 2001-2003, Cambridge Broadband Ltd.

All rights reserved.

Redistribution and use in source and binary forms, with or without modification, are permitted provided that the following conditions are met:

* Redistributions of source code must retain the above copyright notice, this list of conditions and the following disclaimer.
* Redistributions in binary form must reproduce the above copyright notice, this list of conditions and the following disclaimer in the documentation and/or other materials provided with the distribution.
* The name of Cambridge Broadband Ltd. may not be used to endorse or promote products derived from this software without specific prior written permission.

THIS SOFTWARE IS PROVIDED BY THE COPYRIGHT HOLDER ``AS IS" AND ANY EXPRESS OR IMPLIED WARRANTIES, INCLUDING, BUT NOT LIMITED TO, THE IMPLIED WARRANTIES OF MERCHANTABILITY AND FITNESS FOR A PARTICULAR PURPOSE ARE DISCLAIMED. IN NO EVENT SHALL THE COPYRIGHT HOLDER BE LIABLE FOR ANY DIRECT, INDIRECT, INCIDENTAL, SPECIAL, EXEMPLARY, OR CONSEQUENTIAL DAMAGES (INCLUDING, BUT NOT LIMITED TO, PROCUREMENT OF SUBSTITUTE GOODS OR SERVICES; LOSS OF USE, DATA, OR PROFITS; OR BUSINESS INTERRUPTION) HOWEVER CAUSED AND ON ANY THEORY OF LIABILITY, WHETHER IN CONTRACT, STRICT LIABILITY, OR TORT (INCLUDING NEGLIGENCE OR OTHERWISE) ARISING IN ANY WAY OUT OF THE USE OF THIS SOFTWARE, EVEN IF ADVISED OF THE POSSIBILITY OF SUCH DAMAGE.

---- Part 4: Sun Microsystems, Inc. copyright notice (BSD) -----

Copyright c 2003 Sun Microsystems, Inc., 4150 Network Circle, Santa Clara, California 95054, U.S.A. All rights reserved.

Use is subject to license terms below.

This distribution may include materials developed by third parties.

Sun, Sun Microsystems, the Sun logo and Solaris are trademarks or registered trademarks of Sun Microsystems, Inc. in the U.S. and other countries.

Redistribution and use in source and binary forms, with or without modification, are permitted provided that the following conditions are met:

* Redistributions of source code must retain the above copyright notice, this list of conditions and the following disclaimer.
* Redistributions in binary form must reproduce the above copyright notice, this list of conditions and the following disclaimer in the documentation and/or other materials provided with the distribution.
* Neither the name of the Sun Microsystems, Inc. nor the names of its contributors may be used to endorse or promote products derived from this software without specific prior written permission.

THIS SOFTWARE IS PROVIDED BY THE COPYRIGHT HOLDERS AND CONTRIBUTORS ``AS IS" AND ANY EXPRESS OR IMPLIED WARRANTIES, INCLUDING, BUT NOT LIMITED TO, THE IMPLIED WARRANTIES OF MERCHANTABILITY AND FITNESS FOR A PARTICULAR PURPOSE ARE DISCLAIMED. IN NO EVENT SHALL THE COPYRIGHT HOLDERS OR CONTRIBUTORS BE LIABLE FOR ANY DIRECT, INDIRECT, INCIDENTAL, SPECIAL, EXEMPLARY, OR CONSEQUENTIAL DAMAGES (INCLUDING, BUT NOT LIMITED TO, PROCUREMENT OF SUBSTITUTE GOODS OR

SERVICES; LOSS OF USE, DATA, OR PROFITS; OR BUSINESS INTERRUPTION) HOWEVER CAUSED AND ON ANY THEORY OF LIABILITY, WHETHER IN CONTRACT, STRICT LIABILITY, OR TORT (INCLUDING NEGLIGENCE OR OTHERWISE) ARISING IN ANY WAY OUT OF THE USE OF THIS SOFTWARE, EVEN IF ADVISED OF THE POSSIBILITY OF SUCH DAMAGE.

---- Part 5: Sparta, Inc copyright notice (BSD) -----

Copyright (c) 2003-2012, Sparta, Inc

All rights reserved.

Redistribution and use in source and binary forms, with or without modification, are permitted provided that the following conditions are met:

* Redistributions of source code must retain the above copyright notice, this list of conditions and the following disclaimer.
* Redistributions in binary form must reproduce the above copyright notice, this list of conditions and the following disclaimer in the documentation and/or other materials provided with the distribution.
* Neither the name of Sparta, Inc nor the names of its contributors may be used to endorse or promote products derived from this software without specific prior written permission.

THIS SOFTWARE IS PROVIDED BY THE COPYRIGHT HOLDERS AND CONTRIBUTORS ``AS IS'' AND ANY EXPRESS OR IMPLIED WARRANTIES, INCLUDING, BUT NOT LIMITED TO, THE IMPLIED WARRANTIES OF MERCHANTABILITY AND FITNESS FOR A PARTICULAR PURPOSE ARE DISCLAIMED. IN NO EVENT SHALL THE COPYRIGHT HOLDERS OR CONTRIBUTORS BE LIABLE FOR ANY DIRECT, INDIRECT, INCIDENTAL, SPECIAL, EXEMPLARY, OR CONSEQUENTIAL DAMAGES (INCLUDING, BUT NOT LIMITED TO, PROCUREMENT OF SUBSTITUTE GOODS OR SERVICES; LOSS OF USE, DATA, OR PROFITS; OR BUSINESS INTERRUPTION) HOWEVER CAUSED AND ON ANY THEORY OF LIABILITY, WHETHER IN CONTRACT, STRICT LIABILITY, OR TORT (INCLUDING NEGLIGENCE OR OTHERWISE) ARISING IN ANY WAY OUT OF THE USE OF THIS SOFTWARE, EVEN IF ADVISED OF THE POSSIBILITY OF SUCH DAMAGE.

---- Part 6: Cisco/BUPTNIC copyright notice (BSD) -----

Copyright (c) 2004, Cisco, Inc and Information Network Center of Beijing University of Posts and Telecommunications.

All rights reserved.

Redistribution and use in source and binary forms, with or without modification, are permitted provided that the following conditions are met:

* Redistributions of source code must retain the above copyright notice, this list of conditions and the following disclaimer.
* Redistributions in binary form must reproduce the above copyright notice, this list of conditions and the following disclaimer in the documentation and/or other materials provided with the distribution.
* Neither the name of Cisco, Inc, Beijing University of Posts and Telecommunications, nor the names of their contributors may be used to endorse or promote products derived from this software without specific prior written permission.

THIS SOFTWARE IS PROVIDED BY THE COPYRIGHT HOLDERS AND CONTRIBUTORS ``AS IS'' AND ANY EXPRESS OR IMPLIED WARRANTIES, INCLUDING, BUT NOT LIMITED TO, THE IMPLIED WARRANTIES OF MERCHANTABILITY AND FITNESS FOR A PARTICULAR PURPOSE

ARE DISCLAIMED. IN NO EVENT SHALL THE COPYRIGHT HOLDERS OR CONTRIBUTORS BE LIABLE FOR ANY DIRECT, INDIRECT, INCIDENTAL, SPECIAL, EXEMPLARY, OR CONSEQUENTIAL DAMAGES (INCLUDING, BUT NOT LIMITED TO, PROCUREMENT OF SUBSTITUTE GOODS OR SERVICES; LOSS OF USE, DATA, OR PROFITS; OR BUSINESS INTERRUPTION) HOWEVER CAUSED AND ON ANY THEORY OF LIABILITY, WHETHER IN CONTRACT, STRICT LIABILITY, OR TORT (INCLUDING NEGLIGENCE OR OTHERWISE) ARISING IN ANY WAY OUT OF THE USE OF THIS SOFTWARE, EVEN IF ADVISED OF THE POSSIBILITY OF SUCH DAMAGE.

---- Part 7: Fabasoft R&D Software GmbH & Co KG copyright notice (BSD) -----

Copyright (c) Fabasoft R&D Software GmbH & Co KG, 2003 oss@fabasoft.com

Author: Bernhard Penz <bernhard.penz@fabasoft.com>

Redistribution and use in source and binary forms, with or without modification, are permitted provided that the following conditions are met:

* Redistributions of source code must retain the above copyright notice, this list of conditions and the following disclaimer.
* Redistributions in binary form must reproduce the above copyright notice, this list of conditions and the following disclaimer in the documentation and/or other materials provided with the distribution.
* The name of Fabasoft R&D Software GmbH & Co KG or any of its subsidiaries, brand or product names may not be used to endorse or promote products derived from this software without specific prior written permission.

THIS SOFTWARE IS PROVIDED BY THE COPYRIGHT HOLDER ``AS IS'' AND ANY EXPRESS OR IMPLIED WARRANTIES, INCLUDING, BUT NOT LIMITED TO, THE IMPLIED WARRANTIES OF MERCHANTABILITY AND FITNESS FOR A PARTICULAR PURPOSE ARE DISCLAIMED. IN NO EVENT SHALL THE COPYRIGHT HOLDER BE LIABLE FOR ANY DIRECT, INDIRECT, INCIDENTAL, SPECIAL, EXEMPLARY, OR CONSEQUENTIAL DAMAGES (INCLUDING, BUT NOT LIMITED TO, PROCUREMENT OF SUBSTITUTE GOODS OR SERVICES; LOSS OF USE, DATA, OR PROFITS; OR BUSINESS INTERRUPTION) HOWEVER CAUSED AND ON ANY THEORY OF LIABILITY, WHETHER IN CONTRACT, STRICT LIABILITY, OR TORT (INCLUDING NEGLIGENCE OR OTHERWISE) ARISING IN ANY WAY OUT OF THE USE OF THIS SOFTWARE, EVEN IF ADVISED OF THE POSSIBILITY OF SUCH DAMAGE.

---- Part 8: Apple Inc. copyright notice (BSD) -----

Copyright (c) 2007 Apple Inc. All rights reserved.

Redistribution and use in source and binary forms, with or without modification, are permitted provided that the following conditions are met:

1. Redistributions of source code must retain the above copyright notice, this list of conditions and the following disclaimer.
2. Redistributions in binary form must reproduce the above copyright notice, this list of conditions and the following disclaimer in the documentation and/or other materials provided with the distribution.
3. Neither the name of Apple Inc. ("Apple") nor the names of its contributors may be used to endorse or promote products derived from this software without specific prior written permission.

THIS SOFTWARE IS PROVIDED BY APPLE AND ITS CONTRIBUTORS "AS IS" AND ANY EXPRESS OR IMPLIED WARRANTIES, INCLUDING, BUT NOT LIMITED TO, THE IMPLIED WARRANTIES

OF MERCHANTABILITY AND FITNESS FOR A PARTICULAR PURPOSE ARE DISCLAIMED. IN NO EVENT SHALL APPLE OR ITS CONTRIBUTORS BE LIABLE FOR ANY DIRECT, INDIRECT, INCIDENTAL, SPECIAL, EXEMPLARY, OR CONSEQUENTIAL DAMAGES (INCLUDING, BUT NOT LIMITED TO, PROCUREMENT OF SUBSTITUTE GOODS OR SERVICES; LOSS OF USE, DATA, OR PROFITS; OR BUSINESS INTERRUPTION) HOWEVER CAUSED AND ON ANY THEORY OF LIABILITY, WHETHER IN CONTRACT, STRICT LIABILITY, OR TORT (INCLUDING NEGLIGENCE OR OTHERWISE) ARISING IN ANY WAY OUT OF THE USE OF THIS SOFTWARE, EVEN IF ADVISED OF THE POSSIBILITY OF SUCH DAMAGE.

---- Part 9: ScienceLogic, LLC copyright notice (BSD) -----

Copyright (c) 2009, ScienceLogic, LLC

All rights reserved.

Redistribution and use in source and binary forms, with or without modification, are permitted provided that the following conditions are met:

* Redistributions of source code must retain the above copyright notice, this list of conditions and the following disclaimer.
* Redistributions in binary form must reproduce the above copyright notice, this list of conditions and the following disclaimer in the documentation and/or other materials provided with the distribution.
* Neither the name of ScienceLogic, LLC nor the names of its contributors may be used to endorse or promote products derived from this software without specific prior written permission.

THIS SOFTWARE IS PROVIDED BY THE COPYRIGHT HOLDERS AND CONTRIBUTORS "AS IS" AND ANY EXPRESS OR IMPLIED WARRANTIES, INCLUDING, BUT NOT LIMITED TO, THE IMPLIED WARRANTIES OF MERCHANTABILITY AND FITNESS FOR A PARTICULAR PURPOSE ARE DISCLAIMED. IN NO EVENT SHALL THE COPYRIGHT HOLDERS OR CONTRIBUTORS BE LIABLE FOR ANY DIRECT, INDIRECT, INCIDENTAL, SPECIAL, EXEMPLARY, OR CONSEQUENTIAL DAMAGES (INCLUDING, BUT NOT LIMITED TO, PROCUREMENT OF SUBSTITUTE GOODS OR SERVICES; LOSS OF USE, DATA, OR PROFITS; OR BUSINESS INTERRUPTION) HOWEVER CAUSED AND ON ANY THEORY OF LIABILITY, WHETHER IN CONTRACT, STRICT LIABILITY, OR TORT (INCLUDING NEGLIGENCE OR OTHERWISE) ARISING IN ANY WAY OUT OF THE USE OF THIS SOFTWARE, EVEN IF ADVISED OF THE POSSIBILITY OF SUCH DAMAGE.

MIT License

Copyright (c) 1998, 1999, 2000 Thai Open Source Software Center Ltd

Permission is hereby granted, free of charge, to any person obtaining a copy of this software and associated documentation files (the "Software"), to deal in the Software without restriction, including without limitation the rights to use, copy, modify, merge, publish, distribute, sublicense, and/or sell copies of the Software, and to permit persons to whom the Software is furnished to do so, subject to the following conditions:

The above copyright notice and this permission notice shall be included in all copies or substantial portions of the Software.

THE SOFTWARE IS PROVIDED "AS IS", WITHOUT WARRANTY OF ANY KIND, EXPRESS OR IMPLIED, INCLUDING BUT NOT LIMITED TO THE WARRANTIES OF MERCHANTABILITY, FITNESS FOR A PARTICULAR PURPOSE AND NONINFRINGEMENT. IN NO EVENT SHALL THE AUTHORS

OR COPYRIGHT HOLDERS BE LIABLE FOR ANY CLAIM, DAMAGES OR OTHER LIABILITY, WHETHER IN AN ACTION OF CONTRACT, TORT OR OTHERWISE, ARISING FROM, OUT OF OR IN CONNECTION WITH THE SOFTWARE OR THE USE OR OTHER DEALINGS IN THE SOFTWARE.

Copyright 2000 Computing Research Labs, New Mexico State University

Copyright 2001-2015 Francesco Zappa Nardelli

Permission is hereby granted, free of charge, to any person obtaining a copy of this software and associated documentation files (the "Software"), to deal in the Software without restriction, including without limitation the rights to use, copy, modify, merge, publish, distribute, sublicense, and/or sell copies of the Software, and to permit persons to whom the Software is furnished to do so, subject to the following conditions:

The above copyright notice and this permission notice shall be included in all copies or substantial portions of the Software.

THE SOFTWARE IS PROVIDED "AS IS", WITHOUT WARRANTY OF ANY KIND, EXPRESS OR IMPLIED, INCLUDING BUT NOT LIMITED TO THE WARRANTIES OF MERCHANTABILITY, FITNESS FOR A PARTICULAR PURPOSE AND NONINFRINGEMENT. IN NO EVENT SHALL THE COMPUTING RESEARCH LAB OR NEW MEXICO STATE UNIVERSITY BE LIABLE FOR ANY CLAIM, DAMAGES OR OTHER LIABILITY, WHETHER IN AN ACTION OF CONTRACT, TORT OR OTHERWISE, ARISING FROM, OUT OF OR IN CONNECTION WITH THE SOFTWARE OR THE USE OR OTHER DEALINGS IN THE SOFTWARE.

Written by Joel Sherrill <joel@OARcorp.com>.

COPYRIGHT (c) 1989-2000.

On-Line Applications Research Corporation (OAR).

Permission to use, copy, modify, and distribute this software for any purpose without fee is hereby granted, provided that this entire notice is included in all copies of any software which is or includes a copy or modification of this software.

THIS SOFTWARE IS BEING PROVIDED "AS IS", WITHOUT ANY EXPRESS OR IMPLIED WARRANTY. IN PARTICULAR, THE AUTHOR MAKES NO REPRESENTATION OR WARRANTY OF ANY KIND CONCERNING THE MERCHANTABILITY OF THIS SOFTWARE OR ITS FITNESS FOR ANY PARTICULAR PURPOSE.

(1) Red Hat Incorporated

Copyright (c) 1994-2009 Red Hat, Inc. All rights reserved.

This copyrighted material is made available to anyone wishing to use, modify, copy, or redistribute it subject to the terms and conditions of the BSD License. This program is distributed in the hope that it will be useful, but WITHOUT ANY WARRANTY expressed or implied, including the implied warranties of MERCHANTABILITY or FITNESS FOR A PARTICULAR PURPOSE. A copy of this license is available at http://www.opensource.org/licenses. Any Red Hat trademarks that are incorporated in the source code or documentation are not subject to the BSD License and may only be used or replicated with the express permission of Red Hat, Inc.

(2) University of California, Berkeley

Copyright (c) 1981-2000 The Regents of the University of California.

All rights reserved.

Redistribution and use in source and binary forms, with or without modification, are permitted provided that the following conditions are met:

* Redistributions of source code must retain the above copyright notice, this list of conditions and the following disclaimer.
* Redistributions in binary form must reproduce the above copyright notice, this list of conditions and the following disclaimer in the documentation and/or other materials provided with the distribution.
* Neither the name of the University nor the names of its contributors may be used to endorse or promote products derived from this software without specific prior written permission.

THIS SOFTWARE IS PROVIDED BY THE COPYRIGHT HOLDERS AND CONTRIBUTORS "AS IS" AND ANY EXPRESS OR IMPLIED WARRANTIES, INCLUDING, BUT NOT LIMITED TO, THE IMPLIED WARRANTIES OF MERCHANTABILITY AND FITNESS FOR A PARTICULAR PURPOSE ARE DISCLAIMED. IN NO EVENT SHALL THE COPYRIGHT OWNER OR CONTRIBUTORS BE LIABLE FOR ANY DIRECT, INDIRECT, INCIDENTAL, SPECIAL, EXEMPLARY, OR CONSEQUENTIAL DAMAGES (INCLUDING, BUT NOT LIMITED TO, PROCUREMENT OF SUBSTITUTE GOODS OR SERVICES; LOSS OF USE, DATA, OR PROFITS; OR BUSINESS INTERRUPTION) HOWEVER CAUSED AND ON ANY THEORY OF LIABILITY, WHETHER IN CONTRACT, STRICT LIABILITY, OR TORT (INCLUDING NEGLIGENCE OR OTHERWISE) ARISING IN ANY WAY OUT OF THE USE OF THIS SOFTWARE, EVEN IF ADVISED OF THE POSSIBILITY OF SUCH DAMAGE.

The FreeType Project LICENSE

2006-Jan-27

Copyright 1996-2002, 2006 by

David Turner, Robert Wilhelm, and Werner Lemberg

Introduction

==========

The FreeType Project is distributed in several archive packages; some of them may contain, in addition to the FreeType font engine, various tools and contributions which rely on, or relate to, the FreeType Project.

This license applies to all files found in such packages, and which do not fall under their own explicit license. The license affects thus the FreeType font engine, the test programs, documentation and makefiles, at the very least.

This license was inspired by the BSD, Artistic, and IJG (Independent JPEG Group) licenses, which all encourage inclusion and use of free software in commercial and freeware products alike. As a consequence, its main points are that:

o We don't promise that this software works. However, we will be interested in any kind of bug reports. (`as is' distribution)

o You can use this software for whatever you want, in parts or full form, without having to pay us. (`royalty-free' usage)

o You may not pretend that you wrote this software. If you use it, or only parts of it, in a program, you must acknowledge somewhere in your documentation that you have used the FreeType code. (`credits')

We specifically permit and encourage the inclusion of this software, with or without modifications, in commercial products.

We disclaim all warranties covering The FreeType Project and assume no liability related to The FreeType Project.

Finally, many people asked us for a preferred form for a credit/disclaimer to use in compliance with this license. We thus encourage you to use the following text:

"""

Portions of this software are copyright © <year> The FreeType

Project (www.freetype.org). All rights reserved.

"""

Please replace <year> with the value from the FreeType version you actually use.

Legal Terms

==========

0. Definitions

Throughout this license, the terms `package', `FreeType Project', and `FreeType archive' refer to the set of files originally distributed by the authors (David Turner, Robert Wilhelm, and Werner Lemberg) as the `FreeType Project', be they named as alpha, beta or final release.

`You' refers to the licensee, or person using the project, where `using' is a generic term including compiling the project's source code as well as linking it to form a `program' or `executable'.

This program is referred to as `a program using the FreeType engine'.

This license applies to all files distributed in the original FreeType Project, including all source code, binaries and documentation, unless otherwise stated in the file in its original, unmodified form as distributed in the original archive.

If you are unsure whether or not a particular file is covered by this license, you must contact us to verify this.

The FreeType Project is copyright (C) 1996-2000 by David Turner, Robert Wilhelm, and Werner Lemberg. All rights reserved except as specified below.

1. No Warranty

THE FREETYPE PROJECT IS PROVIDED `AS IS' WITHOUT WARRANTY OF ANY KIND, EITHER EXPRESS OR IMPLIED, INCLUDING, BUT NOT LIMITED TO, WARRANTIES OF MERCHANTABILITY AND FITNESS FOR A PARTICULAR PURPOSE. IN NO EVENT WILL ANY OF THE AUTHORS OR COPYRIGHT HOLDERS BE LIABLE FOR ANY DAMAGES CAUSED BY THE USE OR THE INABILITY TO USE, OF THE FREETYPE PROJECT.

2. Redistribution

This license grants a worldwide, royalty-free, perpetual and irrevocable right and license to use, execute, perform, compile, display, copy, create derivative works of, distribute and sublicense the FreeType Project

(in both source and object code forms) and derivative works thereof for any purpose; and to authorize others to exercise some or all of the rights granted herein, subject to the following conditions:

o Redistribution of source code must retain this license file (`FTL.TXT') unaltered; any additions, deletions or changes to the original files must be clearly indicated in accompanying documentation. The copyright notices of the unaltered, original files must be preserved in all copies of source files.

o Redistribution in binary form must provide a disclaimer that states that the software is based in part of the work of the FreeType Team, in the distribution documentation. We also encourage you to put an URL to the FreeType web page in your documentation, though this isn't mandatory.

These conditions apply to any software derived from or based on the FreeType Project, not just the unmodified files. If you use our work, you must acknowledge us. However, no fee need be paid to us.

3. Advertising

Neither the FreeType authors and contributors nor you shall use the name of the other for commercial, advertising, or promotional purposes without specific prior written permission.

We suggest, but do not require, that you use one or more of the following phrases to refer to this software in your documentation or advertising materials: `FreeType Project', `FreeType Engine', `FreeType library', or `FreeType Distribution'.

As you have not signed this license, you are not required to accept it. However, as the FreeType Project is copyrighted material, only this license, or another one contracted with the authors, grants you the right to use, distribute, and modify it.

Therefore, by using, distributing, or modifying the FreeType Project, you indicate that you understand and accept all the terms of this license.

4. Contacts

There are two mailing lists related to FreeType:

o freetype@nongnu.org

Discusses general use and applications of FreeType, as well as future and wanted additions to the library and distribution.

If you are looking for support, start in this list if you haven't found anything to help you in the documentation.

o freetype-devel@nongnu.org

Discusses bugs, as well as engine internals, design issues, specific licenses, porting, etc.

Our home page can be found at

http://www.freetype.org

--- end of FTL.TXT ---

The TWAIN Toolkit is distributed as is. The developer and distributors of the TWAIN Toolkit expressly disclaim all implied, express or statutory warranties including, without limitation, the implied warranties of merchantability, noninfringement of third party rights and fitness for a particular purpose. Neither the

developers nor the distributors will be liable for damages, whether direct, indirect, special, incidental, or consequential, as a result of the reproduction, modification, distribution or other use of the TWAIN Toolkit.

JSON for Modern C++

Copyright (c) 2013-2017 Niels Lohmann

Permission is hereby granted, free of charge, to any person obtaining a copy of this software and associated documentation files (the "Software"), to deal in the Software without restriction, including without limitation the rights to use, copy, modify, merge, publish, distribute, sublicense, and/or sell copies of the Software, and to permit persons to whom the Software is furnished to do so, subject to the following conditions:

The above copyright notice and this permission notice shall be included in all copies or substantial portions of the Software.

THE SOFTWARE IS PROVIDED "AS IS", WITHOUT WARRANTY OF ANY KIND, EXPRESS OR IMPLIED, INCLUDING BUT NOT LIMITED TO THE WARRANTIES OF MERCHANTABILITY, FITNESS FOR A PARTICULAR PURPOSE AND NONINFRINGEMENT. IN NO EVENT SHALL THE AUTHORS OR COPYRIGHT HOLDERS BE LIABLE FOR ANY CLAIM, DAMAGES OR OTHER LIABILITY, WHETHER IN AN ACTION OF CONTRACT, TORT OR OTHERWISE, ARISING FROM, OUT OF OR IN CONNECTION WITH THE SOFTWARE OR THE USE OR OTHER DEALINGS IN THE SOFTWARE.

Copyright (c) 2011 - 2015 ARM LIMITED

All rights reserved.

Redistribution and use in source and binary forms, with or without modification, are permitted provided that the following conditions are met:

- Redistributions of source code must retain the above copyright notice, this list of conditions and the following disclaimer.
- Redistributions in binary form must reproduce the above copyright notice, this list of conditions and the following disclaimer in the documentation and/or other materials provided with the distribution.
- Neither the name of ARM nor the names of its contributors may be used to endorse or promote products derived from this software without specific prior written permission.

THIS SOFTWARE IS PROVIDED BY THE COPYRIGHT HOLDERS AND CONTRIBUTORS "AS IS" AND ANY EXPRESS OR IMPLIED WARRANTIES, INCLUDING, BUT NOT LIMITED TO, THE IMPLIED WARRANTIES OF MERCHANTABILITY AND FITNESS FOR A PARTICULAR PURPOSE ARE DISCLAIMED. IN NO EVENT SHALL COPYRIGHT HOLDERS AND CONTRIBUTORS BE LIABLE FOR ANY DIRECT, INDIRECT, INCIDENTAL, SPECIAL, EXEMPLARY, OR CONSEQUENTIAL DAMAGES (INCLUDING, BUT NOT LIMITED TO, PROCUREMENT OF SUBSTITUTE GOODS OR SERVICES; LOSS OF USE, DATA, OR PROFITS; OR BUSINESS INTERRUPTION) HOWEVER CAUSED AND ON ANY THEORY OF LIABILITY, WHETHER IN CONTRACT, STRICT LIABILITY, OR TORT (INCLUDING NEGLIGENCE OR OTHERWISE) ARISING IN ANY WAY OUT OF THE USE OF THIS SOFTWARE, EVEN IF ADVISED OF THE POSSIBILITY OF SUCH DAMAGE.

Copyright (c) 2014, Kenneth MacKay

All rights reserved.

Redistribution and use in source and binary forms, with or without modification, are permitted provided that the following conditions are met:

* Redistributions of source code must retain the above copyright notice, this list of conditions and the following disclaimer.
* Redistributions in binary form must reproduce the above copyright notice, this list of conditions and the following disclaimer in the documentation and/or other materials provided with the distribution.

THIS SOFTWARE IS PROVIDED BY THE COPYRIGHT HOLDERS AND CONTRIBUTORS "AS IS" AND ANY EXPRESS OR IMPLIED WARRANTIES, INCLUDING, BUT NOT LIMITED TO, THE IMPLIED WARRANTIES OF MERCHANTABILITY AND FITNESS FOR A PARTICULAR PURPOSE ARE DISCLAIMED. IN NO EVENT SHALL THE COPYRIGHT HOLDER OR CONTRIBUTORS BE LIABLE FOR ANY DIRECT, INDIRECT, INCIDENTAL, SPECIAL, EXEMPLARY, OR CONSEQUENTIAL DAMAGES (INCLUDING, BUT NOT LIMITED TO, PROCUREMENT OF SUBSTITUTE GOODS OR SERVICES; LOSS OF USE, DATA, OR PROFITS; OR BUSINESS INTERRUPTION) HOWEVER CAUSED AND ON ANY THEORY OF LIABILITY, WHETHER IN CONTRACT, STRICT LIABILITY, OR TORT (INCLUDING NEGLIGENCE OR OTHERWISE) ARISING IN ANY WAY OUT OF THE USE OF THIS SOFTWARE, EVEN IF ADVISED OF THE POSSIBILITY OF SUCH DAMAGE.

Copyright (c) 2006, CRYPTOGAMS by <appro@openssl.org> All rights reserved.

Redistribution and use in source and binary forms, with or without modification, are permitted provided that the following conditions are met:

* Redistributions of source code must retain copyright notices, this list of conditions and the following disclaimer.
* Redistributions in binary form must reproduce the above copyright notice, this list of conditions and the following disclaimer in the documentation and/or other materials provided with the distribution.
* Neither the name of the CRYPTOGAMS nor the names of its copyright holder and contributors may be used to endorse or promote products derived from this software without specific prior written permission.

ALTERNATIVELY, provided that this notice is retained in full, this product may be distributed under the terms of the GNU General Public License (GPL), in which case the provisions of the GPL apply INSTEAD OF those given above.

THIS SOFTWARE IS PROVIDED BY THE COPYRIGHT HOLDER AND CONTRIBUTORS "AS IS" AND ANY EXPRESS OR IMPLIED WARRANTIES, INCLUDING, BUT NOT LIMITED TO, THE IMPLIED WARRANTIES OF MERCHANTABILITY AND FITNESS FOR A PARTICULAR PURPOSE ARE DISCLAIMED. IN NO EVENT SHALL THE COPYRIGHT OWNER OR CONTRIBUTORS BE LIABLE FOR ANY DIRECT, INDIRECT, INCIDENTAL, SPECIAL, EXEMPLARY, OR CONSEQUENTIAL DAMAGES (INCLUDING, BUT NOT LIMITED TO, PROCUREMENT OF SUBSTITUTE GOODS OR SERVICES; LOSS OF USE, DATA, OR PROFITS; OR BUSINESS INTERRUPTION) HOWEVER CAUSED AND ON ANY THEORY OF LIABILITY, WHETHER IN CONTRACT, STRICT LIABILITY, OR TORT (INCLUDING NEGLIGENCE OR OTHERWISE) ARISING IN ANY WAY OUT OF THE USE OF THIS SOFTWARE, EVEN IF ADVISED OF THE POSSIBILITY OF SUCH DAMAGE.

ISC License

Copyright (c) 2013-2017

Frank Denis <j at pureftpd dot org>

Permission to use, copy, modify, and/or distribute this software for any purpose with or without fee is hereby granted, provided that the above copyright notice and this permission notice appear in all copies.

THE SOFTWARE IS PROVIDED "AS IS" AND THE AUTHOR DISCLAIMS ALL WARRANTIES WITH REGARD TO THIS SOFTWARE INCLUDING ALL IMPLIED WARRANTIES OF MERCHANTABILITY AND FITNESS. IN NO EVENT SHALL THE AUTHOR BE LIABLE FOR ANY SPECIAL, DIRECT, INDIRECT, OR CONSEQUENTIAL DAMAGES OR ANY DAMAGES WHATSOEVER RESULTING FROM LOSS OF USE, DATA OR PROFITS, WHETHER IN AN ACTION OF CONTRACT, NEGLIGENCE OR OTHER TORTIOUS ACTION, ARISING OUT OF OR IN CONNECTION WITH THE USE OR PERFORMANCE OF THIS SOFTWARE.

Copyright (c) 2008 The NetBSD Foundation, Inc.

All rights reserved.

This code is derived from software contributed to The NetBSD Foundation
by Lennart Augustsson (lennart@augustsson.net) at
Carlstedt Research & Technology.

Redistribution and use in source and binary forms, with or without
modification, are permitted provided that the following conditions
are met:

1. Redistributions of source code must retain the above copyright
   notice, this list of conditions and the following disclaimer.
2. Redistributions in binary form must reproduce the above copyright
   notice, this list of conditions and the following disclaimer in the
   documentation and/or other materials provided with the distribution.

THIS SOFTWARE IS PROVIDED BY THE NETBSD FOUNDATION, INC. AND CONTRIBUTORS
"AS IS" AND ANY EXPRESS OR IMPLIED WARRANTIES, INCLUDING, BUT NOT LIMITED
TO, THE IMPLIED WARRANTIES OF MERCHANTABILITY AND FITNESS FOR A PARTICULAR
PURPOSE ARE DISCLAIMED. IN NO EVENT SHALL THE FOUNDATION OR CONTRIBUTORS
BE LIABLE FOR ANY DIRECT, INDIRECT, INCIDENTAL, SPECIAL, EXEMPLARY, OR
CONSEQUENTIAL DAMAGES (INCLUDING, BUT NOT LIMITED TO, PROCUREMENT OF
SUBSTITUTE GOODS OR SERVICES; LOSS OF USE, DATA, OR PROFITS; OR BUSINESS
INTERRUPTION) HOWEVER CAUSED AND ON ANY THEORY OF LIABILITY, WHETHER IN
CONTRACT, STRICT LIABILITY, OR TORT (INCLUDING NEGLIGENCE OR OTHERWISE)
ARISING IN ANY WAY OUT OF THE USE OF THIS SOFTWARE, EVEN IF ADVISED OF THE
POSSIBILITY OF SUCH DAMAGE.

Copyright (c) 2000 Intel Corporation

All rights reserved.

Redistribution and use in source and binary forms, with or without
modification, are permitted provided that the following conditions are met:

* Redistributions of source code must retain the above copyright notice,
this list of conditions and the following disclaimer.

* Redistributions in binary form must reproduce the above copyright notice,
this list of conditions and the following disclaimer in the documentation
and/or other materials provided with the distribution.
* Neither name of Intel Corporation nor the names of its contributors
may be used to endorse or promote products derived from this software
without specific prior written permission.

THIS SOFTWARE IS PROVIDED BY THE COPYRIGHT HOLDERS AND CONTRIBUTORS
"AS IS" AND ANY EXPRESS OR IMPLIED WARRANTIES, INCLUDING, BUT NOT
LIMITED TO, THE IMPLIED WARRANTIES OF MERCHANTABILITY AND FITNESS FOR
A PARTICULAR PURPOSE ARE DISCLAIMED. IN NO EVENT SHALL INTEL OR
CONTRIBUTORS BE LIABLE FOR ANY DIRECT, INDIRECT, INCIDENTAL, SPECIAL,
EXEMPLARY, OR CONSEQUENTIAL DAMAGES (INCLUDING, BUT NOT LIMITED TO,
PROCUREMENT OF SUBSTITUTE GOODS OR SERVICES; LOSS OF USE, DATA, OR
PROFITS; OR BUSINESS INTERRUPTION) HOWEVER CAUSED AND ON ANY THEORY
OF LIABILITY, WHETHER IN CONTRACT, STRICT LIABILITY, OR TORT (INCLUDING
NEGLIGENCE OR OTHERWISE) ARISING IN ANY WAY OUT OF THE USE OF THIS
SOFTWARE, EVEN IF ADVISED OF THE POSSIBILITY OF SUCH DAMAGE.

Lua

Copyright © 1994–2014 Lua.org, PUC-Rio.

Permission is hereby granted, free of charge, to any person obtaining a copy of this software and associated
documentation files (the "Software"), to deal in the Software without restriction, including without limitation the
rights to use, copy, modify, merge, publish, distribute, sublicense, and/or sell copies of the Software, and to
permit persons to whom the Software is furnished to do so, subject to the following conditions:

The above copyright notice and this permission notice shall be included in all copies or substantial portions of
the Software.

THE SOFTWARE IS PROVIDED "AS IS", WITHOUT WARRANTY OF ANY KIND, EXPRESS OR IMPLIED,
INCLUDING BUT NOT LIMITED TO THE WARRANTIES OF MERCHANTABILITY, FITNESS FOR A
PARTICULAR PURPOSE AND NONINFRINGEMENT. IN NO EVENT SHALL THE AUTHORS OR
COPYRIGHT HOLDERS BE LIABLE FOR ANY CLAIM, DAMAGES OR OTHER LIABILITY, WHETHER IN AN
ACTION OF CONTRACT, TORT OR OTHERWISE, ARISING FROM, OUT OF OR IN CONNECTION WITH
THE SOFTWARE OR THE USE OR OTHER DEALINGS IN THE SOFTWARE.

LuaSocket

LuaSocket 2.0.2 license
Copyright © 2004-2007 Diego Nehab

Permission is hereby granted, free of charge, to any person obtaining a copy of this software and associated documentation files (the "Software"), to deal in the Software without restriction, including without limitation the rights to use, copy, modify, merge, publish, distribute, sublicense, and/or sell copies of the Software, and to permit persons to whom the Software is furnished to do so, subject to the following conditions:

The above copyright notice and this permission notice shall be included in all copies or substantial portions of the Software.

THE SOFTWARE IS PROVIDED "AS IS", WITHOUT WARRANTY OF ANY KIND, EXPRESS OR IMPLIED, INCLUDING BUT NOT LIMITED TO THE WARRANTIES OF MERCHANTABILITY, FITNESS FOR A PARTICULAR PURPOSE AND NONINFRINGEMENT. IN NO EVENT SHALL THE AUTHORS OR COPYRIGHT HOLDERS BE LIABLE FOR ANY CLAIM, DAMAGES OR OTHER LIABILITY, WHETHER IN AN ACTION OF CONTRACT, TORT OR OTHERWISE, ARISING FROM, OUT OF OR IN CONNECTION WITH THE SOFTWARE OR THE USE OR OTHER DEALINGS IN THE SOFTWARE.

LuneScript

Copyright (c) 2018 ifritJP

Permission is hereby granted, free of charge, to any person obtaining a copy of this software and associated documentation files (the "Software"), to deal in the Software without restriction, including without limitation the rights to use, copy, modify, merge, publish, distribute, sublicense, and/or sell copies of the Software, and to permit persons to whom the Software is furnished to do so, subject to the following conditions:

The above copyright notice and this permission notice shall be included in all copies or substantial portions of the Software.

THE SOFTWARE IS PROVIDED "AS IS", WITHOUT WARRANTY OF ANY KIND, EXPRESS OR IMPLIED, INCLUDING BUT NOT LIMITED TO THE WARRANTIES OF MERCHANTABILITY, FITNESS FOR A PARTICULAR PURPOSE AND NONINFRINGEMENT. IN NO EVENT SHALL THE AUTHORS OR COPYRIGHT HOLDERS BE LIABLE FOR ANY CLAIM, DAMAGES OR OTHER LIABILITY, WHETHER IN AN ACTION OF CONTRACT, TORT OR OTHERWISE, ARISING FROM, OUT OF OR IN CONNECTION WITH THE SOFTWARE OR THE USE OR OTHER DEALINGS IN THE SOFTWARE.

Copyright (c) 2002-2019, Jouni Malinen <j@w1.fi> and contributors
All Rights Reserved.

This software may be distributed, used, and modified under the terms of BSD license:

Redistribution and use in source and binary forms, with or without modification, are permitted provided that the following conditions are met:

1. Redistributions of source code must retain the above copyright notice, this list of conditions and the following disclaimer.
2. Redistributions in binary form must reproduce the above copyright notice, this list of conditions and the following disclaimer in the documentation and/or other materials provided with the distribution.
3. Neither the name(s) of the above-listed copyright holder(s) nor the names of its contributors may be used to endorse or promote products derived from this software without specific prior written permission.

THIS SOFTWARE IS PROVIDED BY THE COPYRIGHT HOLDERS AND CONTRIBUTORS "AS IS" AND ANY EXPRESS OR IMPLIED WARRANTIES, INCLUDING, BUT NOT LIMITED TO, THE IMPLIED WARRANTIES OF MERCHANTABILITY AND FITNESS FOR A PARTICULAR PURPOSE ARE DISCLAIMED. IN NO EVENT SHALL THE COPYRIGHT OWNER OR CONTRIBUTORS BE LIABLE FOR ANY DIRECT, INDIRECT, INCIDENTAL, SPECIAL, EXEMPLARY, OR CONSEQUENTIAL DAMAGES (INCLUDING, BUT NOT LIMITED TO, PROCUREMENT OF SUBSTITUTE GOODS OR SERVICES; LOSS OF USE, DATA, OR PROFITS; OR BUSINESS INTERRUPTION) HOWEVER CAUSED AND ON ANY THEORY OF LIABILITY, WHETHER IN CONTRACT, STRICT LIABILITY, OR TORT (INCLUDING NEGLIGENCE OR OTHERWISE) ARISING IN ANY WAY OUT OF THE USE OF THIS SOFTWARE, EVEN IF ADVISED OF THE POSSIBILITY OF SUCH DAMAGE.

Copyright (C) 2019, Broadcom Corporation. All Rights Reserved.

Permission to use, copy, modify, and/or distribute this software for any purpose with or without fee is hereby granted, provided that the above copyright notice and this permission notice appear in all copies.

THE SOFTWARE IS PROVIDED "AS IS" AND THE AUTHOR DISCLAIMS ALL WARRANTIES WITH REGARD TO THIS SOFTWARE INCLUDING ALL IMPLIED WARRANTIES OF MERCHANTABILITY AND FITNESS. IN NO EVENT SHALL THE AUTHOR BE LIABLE FOR ANY SPECIAL, DIRECT, INDIRECT, OR CONSEQUENTIAL DAMAGES OR ANY DAMAGES WHATSOEVER RESULTING FROM LOSS OF USE, DATA OR PROFITS, WHETHER IN AN ACTION OF CONTRACT, NEGLIGENCE OR OTHER TORTIOUS ACTION, ARISING OUT OF OR IN CONNECTION WITH THE USE OR PERFORMANCE OF THIS SOFTWARE.

The following applies only to products supporting Wi-Fi.

(c) 2009-2013 by Jeff Mott. All rights reserved.

Redistribution and use in source and binary forms, with or without modification, are permitted provided that the following conditions are met:

* Redistributions of source code must retain the above copyright notice, this list of conditions, and the following disclaimer.
* Redistributions in binary form must reproduce the above copyright notice, this list of conditions, and the following disclaimer in the documentation or other materials provided with the distribution.

* Neither the name CryptoJS nor the names of its contributors may be used to endorse or promote products derived from this software without specific prior written permission.

THIS SOFTWARE IS PROVIDED BY THE COPYRIGHT HOLDERS AND CONTRIBUTORS "AS IS," AND ANY EXPRESS OR IMPLIED WARRANTIES, INCLUDING, BUT NOT LIMITED TO, THE IMPLIED WARRANTIES OF MERCHANTABILITY AND FITNESS FOR A PARTICULAR PURPOSE, ARE DISCLAIMED. IN NO EVENT SHALL THE COPYRIGHT HOLDER OR CONTRIBUTORS BE LIABLE FOR ANY DIRECT, INDIRECT, INCIDENTAL, SPECIAL, EXEMPLARY, OR CONSEQUENTIAL DAMAGES (INCLUDING, BUT NOT LIMITED TO, PROCUREMENT OF SUBSTITUTE GOODS OR SERVICES; LOSS OF USE, DATA, OR PROFITS; OR BUSINESS INTERRUPTION) HOWEVER CAUSED AND ON ANY THEORY OF LIABILITY, WHETHER IN CONTRACT, STRICT LIABILITY, OR TORT (INCLUDING NEGLIGENCE OR OTHERWISE) ARISING IN ANY WAY OUT OF THE USE OF THIS SOFTWARE, EVEN IF ADVISED OF THE POSSIBILITY OF SUCH DAMAGE.

The following applies only to products supporting PIXUS Cloud Link, PIXMA Cloud Link, or MAXIFY Cloud Link.

THE BASIC LIBRARY FUNCTIONS

Written by: Philip Hazel
Email local part: ph10
Email domain: cam.ac.uk
University of Cambridge Computing Service, Cambridge, England.
Copyright (c) 1997-2012 University of Cambridge
All rights reserved.

PCRE JUST-IN-TIME COMPILATION SUPPORT

Written by: Zoltan Herczeg
Email local part: hzmester
Emain domain: freemail.hu
Copyright(c) 2010-2012 Zoltan Herczeg
All rights reserved.

STACK-LESS JUST-IN-TIME COMPILER

Written by: Zoltan Herczeg
Email local part: hzmester
Emain domain: freemail.hu
Copyright(c) 2009-2012 Zoltan Herczeg
All rights reserved.

THE C++ WRAPPER FUNCTIONS

Contributed by: Google Inc.
Copyright (c) 2007-2012, Google Inc.
All rights reserved.

THE "BSD" LICENCE

----------Redistribution and use in source and binary forms, with or without modification, are permitted provided that the following conditions are met:

* Redistributions of source code must retain the above copyright notice, this list of conditions and the following disclaimer.

* Redistributions in binary form must reproduce the above copyright notice, this list of conditions and the following disclaimer in the documentation and/or other materials provided with the distribution.

* Neither the name of the University of Cambridge nor the name of Google Inc. nor the names of their contributors may be used to endorse or promote products derived from this software without specific prior written permission.

THIS SOFTWARE IS PROVIDED BY THE COPYRIGHT HOLDERS AND CONTRIBUTORS "AS IS" AND ANY EXPRESS OR IMPLIED WARRANTIES, INCLUDING, BUT NOT LIMITED TO, THE IMPLIED WARRANTIES OF MERCHANTABILITY AND FITNESS FOR A PARTICULAR PURPOSE ARE DISCLAIMED. IN NO EVENT SHALL THE COPYRIGHT OWNER OR CONTRIBUTORS BE LIABLE FOR ANY DIRECT, INDIRECT, INCIDENTAL, SPECIAL, EXEMPLARY, OR CONSEQUENTIAL DAMAGES (INCLUDING, BUT NOT LIMITED TO, PROCUREMENT OF SUBSTITUTE GOODS OR SERVICES; LOSS OF USE, DATA, OR PROFITS; OR BUSINESS INTERRUPTION) HOWEVER CAUSED AND ON ANY THEORY OF LIABILITY, WHETHER IN CONTRACT, STRICT LIABILITY, OR TORT (INCLUDING NEGLIGENCE OR OTHERWISE) ARISING IN ANY WAY OUT OF THE USE OF THIS SOFTWARE, EVEN IF ADVISED OF THE POSSIBILITY OF SUCH DAMAGE.

This software is based in part on the work of the Independent JPEG Group.

Easy Understanding Network Connections

What is Wireless Connection

Connect the printer and devices (e.g. computer/smartphone/tablet) using a wireless router.

If you have a wireless router, we recommend you use one for wireless connection.

- Connection methods vary depending on the wireless router type.
- You can change network settings such as the network name (SSID) and security protocol on the printer.
- When the connection between a device and a wireless router is completed and (Wi-Fi icon) is displayed in the device's screen, you can connect the device to the printer using the wireless router.

What is Wireless Direct Connection

Connect the printer and devices (e.g. computer/smartphone/tablet) without using a wireless router.

- While you are using the printer with Wireless Direct, Internet connection from the printer becomes unavailable. In that case, web services for the printer cannot be used.
- If you connect a device connected to the Internet via a wireless router to the printer that is in the Wireless Direct, the connection between the device and wireless router will be disabled. In that case, the connection of the device may switch to a mobile data connection automatically depending on your device. Transmission fees for connecting to the Internet using a mobile data connection apply.
- In the Wireless Direct, you can connect up to five devices at the same time. If you try to connect a sixth device while five devices are already connected, an error will appear. If an error appears, disconnect a device you do not use and configure settings again.
- Network settings such as the network name (SSID) and security protocol are specified automatically.

➡ Connecting with Wireless Direct

What is Wired Connection

Connect the printer and hub/router using a LAN cable. To make a wired connection on a model that supports wired connection, prepare a LAN cable.

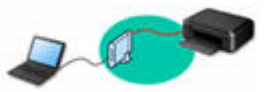

USB Connection (Reference)

Note

- You can connect the printer and computer using a USB cable (USB connection). Prepare a USB cable. For details, see Switching Printer's Connection to Network or Devices.

Network Connection Settings/Setup

Perform connection setup for the printer and computer/smartphone/tablet.

For more on setup procedure, see the web page.

Connecting with Wireless Direct

➡ Connecting with Wireless Direct

Changing Network Settings

See below for changing connection settings for the printer and computer/smartphone/tablet.

- To change network connection method:
  - ➡ Switching Printer's Connection to Network or Devices
  - ➡ Changing the Connection Mode
- To add computer/smartphone/tablet to the printer:
  - ➡ Switching Printer's Connection to Network or Devices

Wi-Fi Connection Assistant

Wi-Fi Connection Assistant checks or diagnoses the settings of the printer and those of computer and restores the status of them if anything is wrong with network connection. Select either link below to download Wi-Fi Connection Assistant.

➡ Checking Printer Connection Status Using Wi-Fi Connection Assistant

- Performing/Changing Network Settings (Windows)

  For Windows, you can perform network settings using Wi-Fi Connection Assistant.

  ➡ Wi-Fi Connection Assistant (Windows)
- Diagnosing and Repairing Network Settings (Windows/macOS)

  You can diagnose or repair network settings using Wi-Fi Connection Assistant.

  - **For Windows:**

    ➡ Wi-Fi Connection Assistant (Windows)
  - **For macOS:**

    ➡ Wi-Fi Connection Assistant (macOS)

Network Connection Tips

See below for tips on using the printer via network connection.

➡ Network Connection Tips (Windows/macOS)
➡ Handling Printer Configuration Using the Web Browser
➡ Countermeasures against Unauthorized Access

Troubleshooting

See Network FAQ for troubleshooting on network connection.

Notice/Restriction

See below for details.

- Restrictions on network settings:

➡ Restrictions

- Notices when printing using web service:
  ➡ Notice for Web Service Printing

Restrictions

When connecting another device while a device (such as a computer) is already connected to the printer, connect it using the same connection method as the connected device.
If you connect using a different connection method, the connection to the device in use will be disabled.
However, you can use a Wi-Fi connection and Wireless Direct at the same time.

For restrictions, see the following.

Connect via wireless router

- Make sure your device and the wireless router are connected. For details on checking these settings, see the manual supplied with the wireless router or contact its manufacturer.
  As for a device already connected to the printer without using a wireless router, reconnect it via a wireless router.
- Configuration, router functions, setup procedures and security settings of wireless routers vary depending on the system environment. For details, see the manual for your wireless router or contact its manufacturer.
- Depending on your country or region, this printer does not support wireless networking standards using the 5 GHz band.
- If the current channel bandwidth setting on your device does not include 20 MHz, TKIP cannot be used for a security protocol. Change the setting to something that includes 20 MHz. For improved security, we recommend that you set to AES together with WPA2 or higher security.
  The connection between your device and the wireless router will be temporarily disabled while the setting is changed. Do not proceed to the next screen of this guide until setup is complete.
- When connecting to Wi-Fi outdoors, do not connect to a 5 GHz network (SSID).
  The 5 GHz band available for use with the printer includes the channels that are allowed for indoor use only, depending on your country or region.
  For details on the 5 GHz network (SSID) of your wireless router, see the manual supplied with the wireless router, or contact its manufacturer.
- For office use, consult your network administrator.
- Note that if you connect to a network with no security protection, your personal information could be disclosed to a third party.

Wireless Direct

Important

- If a device is connected to the Internet via a wireless router, and you then connect it to a printer in Wireless Direct mode, the existing connection between the device and wireless router will be disabled. In that case, the connection of the device may switch to a mobile data connection automatically depending on your device. When you connect to the Internet using a mobile data connection, charges may apply depending on your contract.
  - When you connect a device and the printer using Wireless Direct, the connection information will be saved to Wi-Fi settings. The device may be connected to the printer automatically even after disconnecting it or connecting it to another wireless router.

- To prevent automatic connection to the printer in Wireless Direct mode, change the connection mode after using the printer, or set not to connect automatically in the Wi-Fi settings of the device.
  For details on changing the settings of your device, see the manual supplied with the device or contact its manufacturer.

- If you connect a device and the printer using Wireless Direct, Internet connection may become unavailable depending on your environment. In that case, web services for the printer cannot be used.
- In Wireless Direct mode, you can connect up to five devices at the same time. If you try to connect a sixth device while five devices are already connected, an error will appear.
  If an error appears, disconnect a device that does not use the printer, and then redo the settings.
- Devices connected to the printer using Wireless Direct cannot communicate with each other.
- When a device has been connected to the printer without using a wireless router and you want to set it up again using the same connection method, disconnect it first. Disable the connection between the device and printer in the Wi-Fi setting screen.

Network Connection Tips (Windows/macOS)

- Detect Same Printer Name
- Switching Printer's Connection to Network or Devices

Detect Same Printer Name

When the printer is detected during setup, plural printers with the same name may appear on the results screen.

Select a printer with checking the printer settings against those on detection result screen.

- **For Windows:**

  Check the printer's MAC address or serial to select the correct printer from the results.

- **For macOS:**

  The printer names appear with the MAC address added at the end or as the printer name specified by Bonjour.

  Check identifiers such as the MAC address, the printer name specified by Bonjour, and the printer's serial number to select the printer from among those that appear.

Note

- Serial number may not appear on result screen.

To check the printer's MAC address and the serial number, print out the network settings information.

➡ Printing Network Settings

Note

- Some models allow you to check the serial number on the LCD.

  ➡ System information

Switching Printer's Connection to Network or Devices

Check the following items when connecting a newly added computer to the LAN environment to the printer, changing the connection method from USB to LAN, or changing the wireless LAN (Wi-Fi) connection method.

- Connects to Another Computer via LAN/Changes from USB to LAN Connection
- Switching LAN Connection Method
- Reconfiguration Method of Wi-Fi Connection

Connects to Another Computer via LAN/Changes from USB to LAN Connection

To connect an additional computer to the printer via LAN, or to change from USB to LAN connection, refer to Setup Guide to setup.

Switching LAN Connection Method

If you want to switch the connection method to a USB connection when the printer is used with a LAN connection, refer to Setup Guide to setup.

Reconfiguration Method of Wi-Fi Connection

- **If you want to switch to Wireless Direct when using the printer with Wi-Fi connection:**

  Wireless Direct and wireless LAN connection (Wi-Fi) can be used together, but only at 2.4GHz.

  Connecting with Wireless Direct

- **Switching to a Wi-Fi connection when using the printer Wireless Direct:**

  If you connect the printer to your computer or smartphone via a Wi-Fi router for the first time to print, or if you want to change the connection frequency between the printer and the Wi-Fi router, perform the setup.

  - **For Windows:**

    Refer to Setup Guide and redo setup.

  - **For macOS:**

    Refer to Setup Guide and redo setup.

Wi-Fi Connection Assistant (Windows)

- Wi-Fi Connection Assistant
- Starting Up Wi-Fi Connection Assistant
- Diagnosing and Repairing Network Settings
- Performing/Changing Network Settings
- List of Models Which Does Not Support Diagnosis and Repair Function
- List of Models Which Does Not Support IPv6 Configuration via USB Connection

Important

- Available functions and settings vary depending on your printer.

Wi-Fi Connection Assistant

Wi-Fi Connection Assistant allows you to diagnose or repair the network status, and to perform printer settings on network.

Use Wi-Fi Connection Assistant for:

- Searching printers on network and performing initial network setup for detected printers
- Performing initial network setup by connecting the printer and computer using a USB cable (Not available for some models)
- Changing printer network settings
- Diagnosing the settings of the printer and those of computer on which Wi-Fi Connection Assistant is installed if anything is wrong with connection. In addition, Wi-Fi Connection Assistant repairs the status of the printer and computer (Not available for some models).

Important

- Depending on the printer you are using, an administrator password is already specified for the printer at the time of purchase. When you change the network settings, authentication by the administrator password is required.

  For details:

  ➡ Administrator Password

  For improving security, we recommend to change the administrator password.

  ➡ Change Administrator Password

- To use the printer over LAN, make sure you have the equipment necessary for the connection type, such as a wireless router or a LAN cable.
- When you install Wi-Fi Connection Assistant, disable block function of firewall.
- Do not change network settings using Wi-Fi Connection Assistant while printing is in progress.

Starting Up Wi-Fi Connection Assistant

Start up Wi-Fi Connection Assistant as shown below.

In Windows 11, from (**Start** button) on the taskbar, select **All apps** > **Canon Utilities** > **Wi-Fi Connection Assistant**.

Note

- In Windows 10, select **Start** > (**All apps** >) > **Canon Utilities** > **Wi-Fi Connection Assistant**.
- In Windows 7, click **Start** and select **All Programs**, **Canon Utilities**, **Wi-Fi Connection Assistant**, and then **Wi-Fi Connection Assistant**.

When you start up Wi-Fi Connection Assistant, a message appears. Check the message and select **Yes**. The screen below appears.

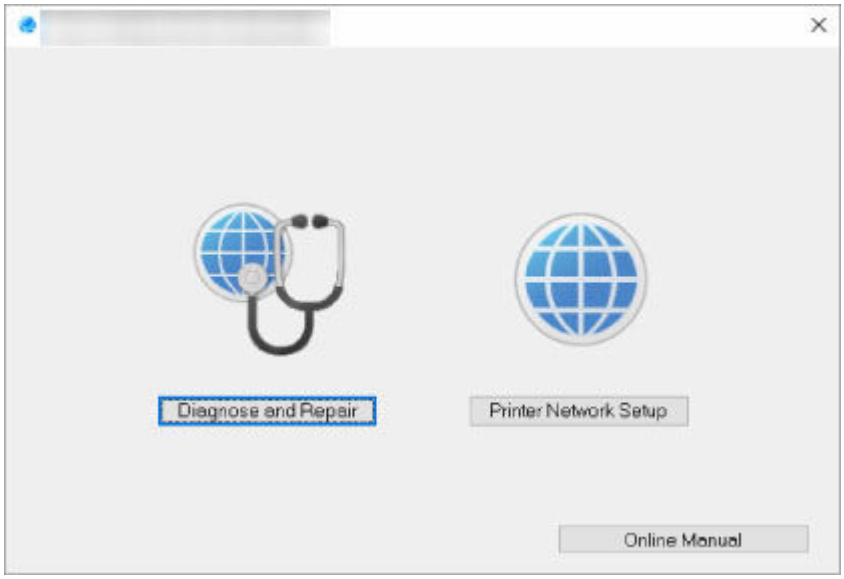

Select **Diagnose and Repair** or **Printer Network Setup** on the displayed screen.

- If you select **Diagnose and Repair**:

  ➡ Diagnosing and Repairing Network Settings

- If you select **Printer Network Setup**:

  ➡ Performing/Changing Network Settings

Diagnosing and Repairing Network Settings

Wi-Fi Connection Assistant diagnoses and repairs computer settings or connection between the computer and printer when a problem (e.g. cannot print from a printer on the network) occurs.

Important

- Some models do not support diagnosis and repair function.

  For details:

  ➡ List of Models Which Does Not Support Diagnosis and Repair Function

Follow the procedure below.

1. Start up Wi-Fi Connection Assistant.

2. Check the displayed message and select **Yes**.

3. Select **Diagnose and Repair** on the displayed screen.

   Perform operations following the instructions on the screen.

   Note

   - This function checks the following items:
     - whether the computer is connected to the router
     - whether a web page on the Internet can be viewed
     - whether the printer can be detected on the network
     - whether the signal strength or communication level is sufficient (when using Wi-Fi)
     - whether the printer port setting matches with the network setting

Performing/Changing Network Settings

- Canon Wi-Fi Connection Assistant Screen
- Performing Network Settings

Canon Wi-Fi Connection Assistant Screen

- Items on Canon Wi-Fi Connection Assistant Screen
- Menus on Canon Wi-Fi Connection Assistant Screen
- Items on Canon Wi-Fi Connection Assistant Screen Toolbar

Items on Canon Wi-Fi Connection Assistant Screen

The screen below appears when you start up Wi-Fi Connection Assistant and select **Printer Network Setup**. Detected printers are listed on the screen and the items below are shown.

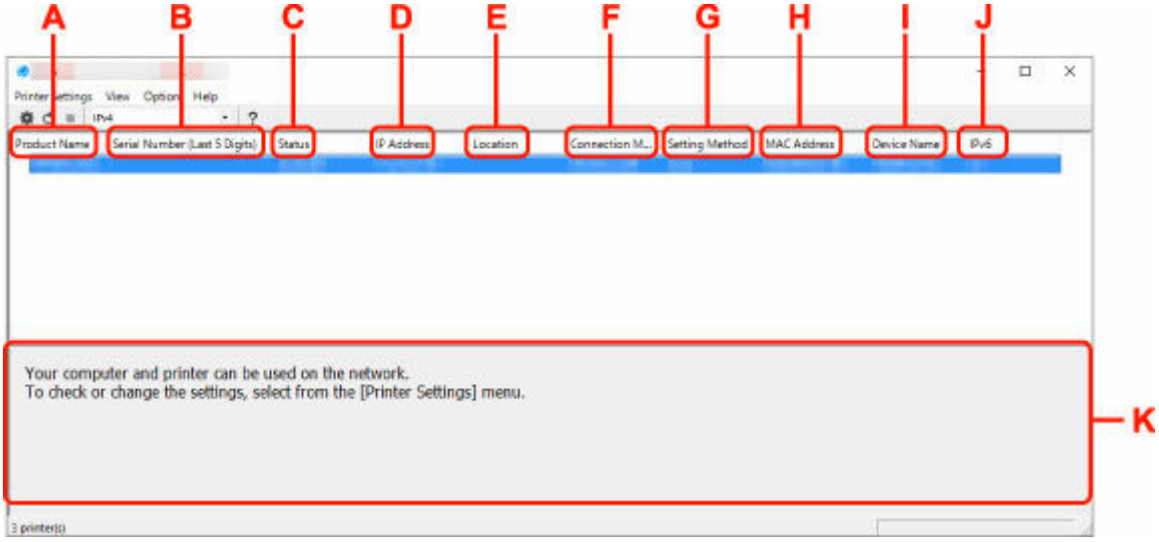

A: Product Name

Displays the product name of detected printer. The icon below appears on the left if the printer cannot be used.

: Appears when the printer requires setup or has not been configured.

: Appears when the IP address is duplicated to another printer.

: Appears when you cannot communicate with the printer.

Note

- If a printer you want to use is not detected, try to set the criteria for printer search.
  - Setting Criteria for Printer Search/Searching Specific Printer
- Right-clicking a printer displays setting items or items to confirm.

B: Serial Number (Last 5 Digits)

Displays the last five digits of printer's serial number.

C: Status

Displays the printer status as shown below.

- **Available**

  Indicates the printer is available.

- **Setup Completed**

Appears after performing network setup and clicking **Set** to close the window.

- **Requires Setup**

  Indicates the printer is required to perform Wi-Fi setup.

  ➡ Performing/Changing Wi-Fi Settings

- **Not Set**

  Indicates the printer cannot be used on network, or IPv6 is disabled. Specify an IP address or enable IPv6 on **Network Settings...**.

  ➡ Performing/Changing Wi-Fi Settings

- **IP Address Overlap**

  Indicates the IP address is duplicated to another printer.

- **Unknown**

  Indicates the printer recognized as **Available** in the past cannot be used currently.

  Note

  - If **USB** is selected from the pulldown menu on the toolbar, nothing is displayed.

D: IP Address

Displays the printer IP address. Nothing is displayed if the printer status is **Requires Setup**.

Note

- If **USB** is selected from the pulldown menu on the toolbar, "-" is displayed.

E: Location

Displays the printer location if it is registered. Nothing is displayed if the printer status is **Requires Setup**.

Note

- If **USB** is selected from the pulldown menu on the toolbar, nothing is displayed.

➡ Assigning Printer Information

F: Connection Method

Displays printer connection method (wired LAN, Wi-Fi, or USB).

Note

- If **USB** is selected from the pulldown menu on the toolbar, **USB** is displayed.
- If the printer supports both of the LAN connection methods, the printer is recognized as two printers and they are displayed separately. (The same numbers are displayed on **Serial Number (Last 5 Digits)**.)
- If the printer does not support wired LAN, wired LAN is not displayed.
- If you are using Wi-Fi Connection Assistant on the computer which does not support Wi-Fi, Wi-Fi is not displayed.

G: Setting Method

Displays printer setting method.

- **Auto**

Appears if the printer is used by IP address specified automatically.

- **Manual**

  Appears if the printer is used by IP address specified manually.

Note

- If **USB** is selected from the pulldown menu on the toolbar, "-" is displayed.

H: MAC Address

Displays the MAC address of the detected printer.

Note

- If **USB** is selected from the pulldown menu on the toolbar, "-" is displayed.

I: Device Name

Displays the printer device name if it is registered.

Note

- If **USB** is selected from the pulldown menu on the toolbar, nothing is displayed.
- The printer with **Requires Setup** displayed on **Status** is not displayed.

➡ Assigning Printer Information

J: IPv6

On appears when an IPv6 address is assigned for the printer.

Note

- If **USB** is selected from the pulldown menu on the toolbar, "-" is displayed.

K: Displays the printer status and operation guides.

Selecting a printer from the printer list displays its current status and what to do next.

Menus on Canon Wi-Fi Connection Assistant Screen

This section describes menus on **Canon Wi-Fi Connection Assistant** screen.

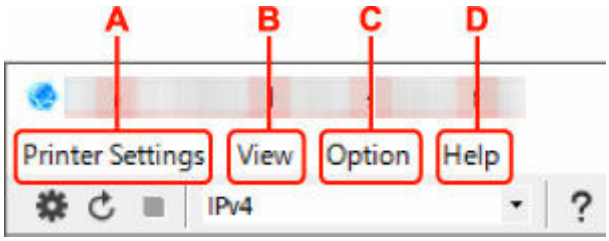

A: Printer Settings menu

➡ Printer Settings Menu

B: View menu

➡ View Menu

C: Option menu

➡ Option Menu

D: Help menu

➡ Help Menu

Items on Canon Wi-Fi Connection Assistant Screen Toolbar

This section describes items on **Canon Wi-Fi Connection Assistant** Screen toolbar.

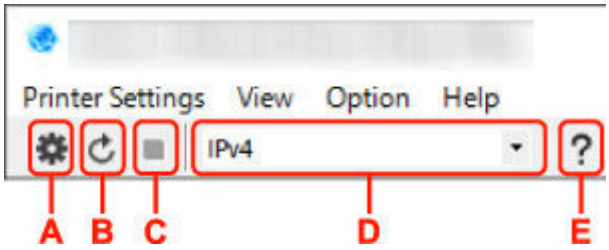

A: Perform wired or Wi-Fi setup.

Note

- This item has the same function as **Network Settings...** in the **Printer Settings** menu.

B: Redetects printers.

Note

- This item has the same function as **Update** in the **View** menu.

C: Stops detecting printers.

Note

- This item has the same function as **Cancel** in the **View** menu.

D: Switches the printer list. (IPv4, IPv6, or USB printers)

Note

- This item has the same function as **Switch View** in the **View** menu.
- You can also display the USB connected printer list. (Not available for some models.) In this case, select **USB**.

E: Displays this guide.

Note

- This item has the same function as **Online Manual** in the **Help** menu.

Performing Network Settings

- **Performing/Changing Wired LAN Connection (Ethernet Cable) Settings （Supported models only）**
- **Performing/Changing Wi-Fi Settings**
- **Assigning Printer Information**

Important

- Some functions may not be available depending on your model and software version.

Performing/Changing Wi-Fi Settings

Follow the procedure below to perform/change Wi-Fi settings.

Important

- Enable Easy wireless connect (Cableless setup) before performing printer setup. (Not required if you change the IP address.) For details, search for "NR049" on your printer's online manual and see the page shown.
- If you plan to use a printer over Wi-Fi, make sure you perform security settings for the Wi-Fi network.

Note

- For some models, you can perform network setup for a USB connected printer using Wi-Fi Connection Assistant. Select **USB** on **Switch View** under the **View** menu to display printers.

1. Start up Wi-Fi Connection Assistant.

2. Check the displayed message and select **Yes**.

3. Select **Printer Network Setup** on the displayed screen.

   Detected printers are listed.

4. Select printer to perform/change settings from printer list.

   Select the printer with **Wi-Fi** displayed on **Connection Method** and **Available** or **Requires Setup** displayed on **Status** to perform settings.

   You can perform settings for a printer with **Available** or **Requires Setup** not displayed on **Status** via USB connection.

   To perform setup for a USB connected printer, select **USB** from the pulldown menu on the toolbar and select the printer to perform/change settings.

5. Select **Network Settings...** on **Printer Settings** menu.

   The **Confirm Printer Password** screen appears.

   For more on the password, refer to Administrator Password.

   ### Note

   - Clicking the ⚙ icon allows you to perform/change settings.
   - If you select a USB connected printer on step 4 and the selected printer is compatible with wired LAN, the screen below appears after the **Confirm Printer Password** screen appears

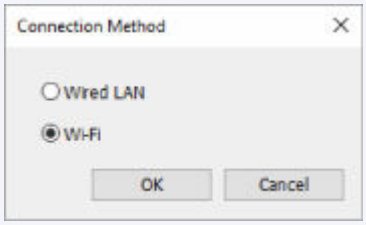

Select **Wi-Fi** and click **OK**.

6. Enter password and click **OK**.

The **Network Settings** screen appears.

7. Perform/change settings.

You can switch the screen between IPv4 and IPv6. Click the tab to switch the protocol.

- IPv4/IPv6 settings

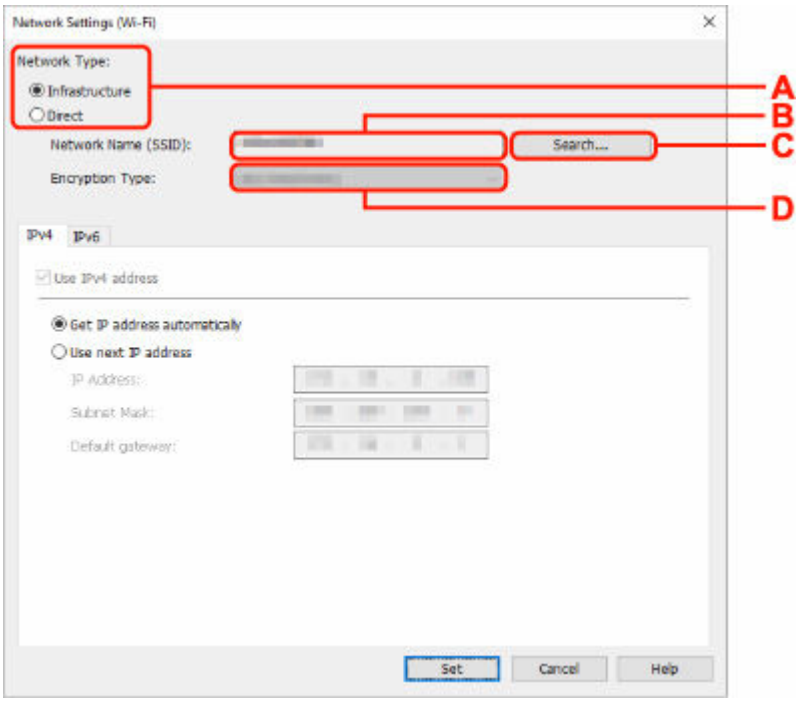

A: Network Type:

Select the Wi-Fi mode.

- **Infrastructure**

  Connects the printer to the Wi-Fi with a wireless router.

- **Direct**

  Connects the printer to wireless communication devices (smartphone or tablet) without a wireless router.

Note

- If Wi-Fi is enabled on the computer and if you select a USB connected printer on step 4, you can select **Direct** depending on the printer you are using.
- If **Direct** is selected, all items are displayed in a gray out status and you cannot perform any settings.

  In addition, you cannot connect to Internet from your computer depending on your operating environment.

B: Network Name (SSID):

The network name (SSID) of the Wi-Fi currently used is displayed.

The network name (SSID) for Wireless Direct appears while in Wireless Direct.

C: Search...

The **Detected Wireless Routers** screen is displayed to select a wireless router to connect to. For a wireless router already connected to the computer, **Available** is displayed on **Communication Status**.

If you select a wireless router with **Not Connected** on **Communication Status** from the list, clicking **Set** displays the WPA/WPA2 or WEP setting screen for a wireless router.

➡ If WEP Details Screen Appears
➡ If WPA/WPA2 Details Screen Appears

D: Encryption Type:

Displays the encryption method used over the Wi-Fi.

- IPv4 settings

Note

- The setting items below are available only when **Infrastructure** is selected for **Network Type:**.

  If **Direct** is selected, all items are displayed in a gray out status and you cannot perform any settings.

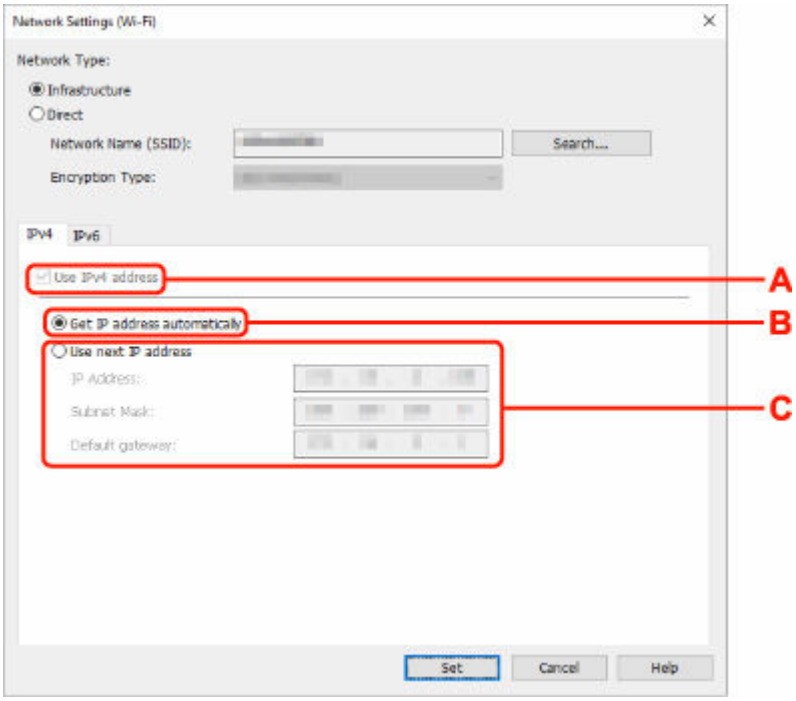

A: Use IPv4 address

Always selected. (displayed in a gray out state)

B: Get IP address automatically

Select this option to use an IP address automatically assigned by a DHCP server. DHCP server functionality must be enabled on your wireless router.

C: Use next IP address

Select this option if no DHCP server functionality is available in your setup where you use the printer, or you want to use a fixed IP address.

Enter the IP address, subnet mask, and default gateway.

- IPv6 settings

Note

- If you select a USB connected printer on step 4, you cannot perform IPv6 settings depending on the printer you are using.

  For details, see List of Models Which Does Not Support IPv6 Configuration via USB Connection.

- The setting items below are available only when **Infrastructure** is selected for **Network Type:**.

  If **Direct** is selected, all items are displayed in a gray out status and you cannot perform any settings.

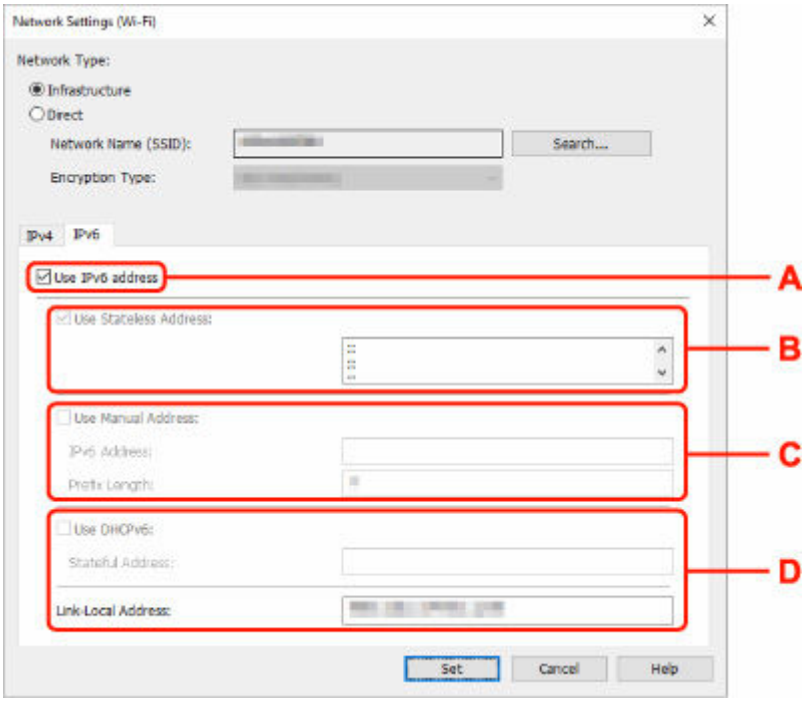

A: Use IPv6 address

Select when you use the printer with IPv6 environment.

B: Use Stateless Address:

Select when you use an IP address assigned automatically. Use a router compatible with IPv6.

Note

- This setting item is not available depending on the printer you are using.

C: Use Manual Address:

Select this option if no DHCP server functionality is available in your setup where you use the printer, or you want to use a fixed IP address.

Enter the IP address and IP address prefix length.

Note

- This setting item is not available depending on the printer you are using.

D: Use DHCPv6:

Select when you obtain an IP address using DHCPv6.

Note

- This setting item is not available depending on the printer you are using.

8. Click **Set**.

Assigning Printer Information

Follow the procedure below to assign/change printer location name or device name.

The names appear on **Device Name:** and **Location:** on the **Canon Wi-Fi Connection Assistant** screen.

Note

- If **USB** is selected from the pulldown menu on the toolbar, this setting item is not available.

1. Start up Wi-Fi Connection Assistant.

2. Check the displayed message and select **Yes**.

3. Select **Printer Network Setup** on the displayed screen.

   Detected printers are listed.

4. Select printer to assign location name and device name.

   Select the printer with **Available** displayed on **Status**.

5. Select **Detailed Printer Settings...** on **Printer Settings** menu.

   The **Confirm Printer Password** screen appears.

   For more on the password, refer to Administrator Password.

6. Enter password and click **OK**.

   The **Detailed Printer Settings** screen appears.

7. Perform/change settings.

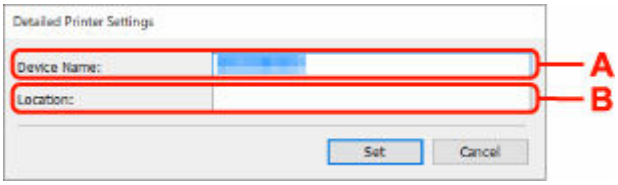

   The setting items below are available.

   A: Device Name:
   Assigns the device name.

   B: Location:
   Assigns the location name.

8. Click **Set**.

List of Models Which Does Not Support Diagnosis and Repair Function

The following models does not support "Diagnose and Repair" function of Wi-Fi Connection Assistant.

- G4000 series
- PRO-500 series
- PRO-1000 series
- MB2100 series
- MB2700 series
- MB5100 series
- MB5400 series
- iB4100 series
- PRO-520
- PRO-540
- PRO-540S
- PRO-560
- PRO-560S
- PRO-2000
- PRO-4000
- PRO-4000S
- PRO-6000
- PRO-6000S
- TS9000 series
- TS8000 series
- TS6000 series
- TS5000 series
- MG3000 series
- E470 series

List of Models Which Does Not Support IPv6 Configuration via USB Connection

For the following models, you can perform settings only for IPv4 using Wi-Fi Connection Assistant. (You cannot perform settings for IPv6.)

- iB4100 series
- MG3000 series
- E470 series
- G4000 series
- TS5000 series
- TS6000 series
- TS8000 series
- TS9000 series
- TR8500 series
- TR7500 series
- TS9100 series
- TS8100 series
- TS6100 series
- TS5100 series
- TS3100 series
- E3100 series
- TS300 series
- E300 series
- TR8580 series
- TS9180 series
- TS8180 series
- TS6180 series
- TR8530 series
- TR7530 series
- TS8130 series
- TS6130 series
- XK70 series
- XK50 series
- G4010 series
- G3010 series
- TR4500 series
- E4200 series
- TS6200 series
- TS6280 series
- TS6230 series
- TS8200 series
- XK80 series
- TS8280 series
- TS8230 series
- TS9500 series
- TS9580 series

- TR9530 series
- TS3300 series
- E3300 series

Wi-Fi Connection Assistant (macOS)

- Wi-Fi Connection Assistant
- Starting Up Wi-Fi Connection Assistant
- Diagnosing and Repairing Network Settings
- List of Models Which Does Not Support Diagnosis and Repair Function

Important

- Available functions and settings vary depending on your printer.

Wi-Fi Connection Assistant

If anything is wrong with connection, Wi-Fi Connection Assistant diagnoses the settings of the printer and those of computer on which it is installed. In addition, Wi-Fi Connection Assistant restores the status of the printer and computer.

Important

- To use the printer over LAN, make sure you have the equipment necessary for the connection type, such as a wireless router or a LAN cable.
- When you install Wi-Fi Connection Assistant, disable block function of firewall.

Starting Up Wi-Fi Connection Assistant

Start up **Launchpad**, select **Canon Utilities**, and then select Wi-Fi Connection Assistant.

When you start up Wi-Fi Connection Assistant, the screen below appears.

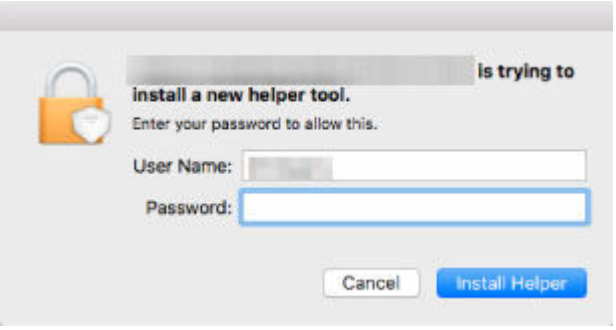

Enter the password specified for your computer and select **Install Helper**. Wi-Fi Connection Assistant starts diagnosis and repair of network.

➡ Diagnosing and Repairing Network Settings

Diagnosing and Repairing Network Settings

Wi-Fi Connection Assistant diagnoses and repairs computer settings or connection between the computer and printer when a problem (e.g. cannot print from a printer on the network) occurs.

Important

- Some models do not support diagnosis and repair function.

  For details:

  ➡ List of Models Which Does Not Support Diagnosis and Repair Function

Wi-Fi Connection Assistant starts checking the computer settings when it starts up. Perform operations following the instructions on the screen.

Note

- This function checks the following items:
  - whether the computer is connected to the router
  - whether the printer can be detected on the network
  - whether the signal strength or communication level is sufficient (when using Wi-Fi)
  - whether the printer port setting matches with the network setting

List of Models Which Does Not Support Diagnosis and Repair Function

The following models does not support "Diagnose and Repair" function of Wi-Fi Connection Assistant.

- G4000 series
- PRO-500 series
- PRO-1000 series
- MB2100 series
- MB2700 series
- MB5100 series
- MB5400 series
- iB4000 series
- PRO-520
- PRO-540
- PRO-560
- PRO-540S
- PRO-560S
- PRO-2000
- PRO-4000
- PRO-6000
- PRO-4000S
- PRO-6000S
- TS9000 series
- TS8000 series
- TS6000 series
- TS5000 series
- MG3000 series
- E470 series

Handling Paper, Originals, Ink Tanks, etc.

- Loading Paper
- Loading Originals
- Refilling Ink Tanks

Loading Paper

- Loading Photo Paper / Plain Paper
- Loading Envelopes

Loading Photo Paper / Plain Paper

You can load photo paper or plain paper.

1. Prepare paper.

Align the edges of paper. If paper is curled, flatten it.

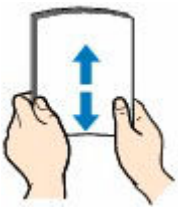

Note

- Align the edges of paper neatly before loading. Loading paper without aligning the edges may cause paper jams.
- If paper is curled, hold the curled corners and gently bend them in the opposite direction until the paper becomes completely flat.

  For more details on handling curled paper, see Check 3 in Paper Is Smudged/Printed Surface Is Scratched/Ink Blots/Paper Curl.
- When using Photo Paper Plus Semi-gloss SG-201, even if the sheet is curled, load one sheet at a time as it is. If you roll up this paper to flatten, this may cause cracks on the surface of the paper and reduce the print quality.

2. Open the paper support (A).

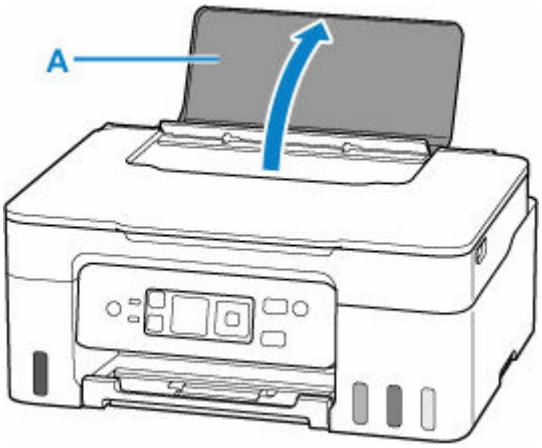

3. Slide right paper guide (B) to open both paper guides.

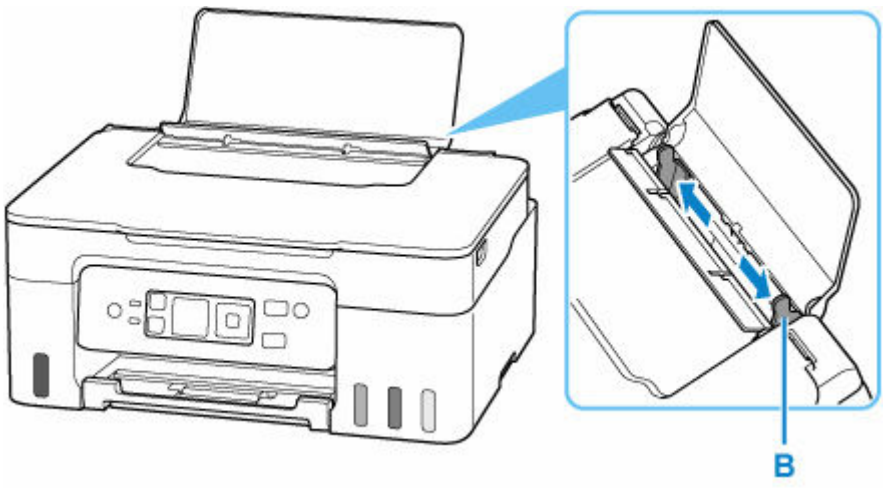

4. Load paper stack in portrait orientation WITH THE PRINT SIDE FACING UP.

After loading the paper, the paper setting confirmation screen for the rear tray appears on the LCD.

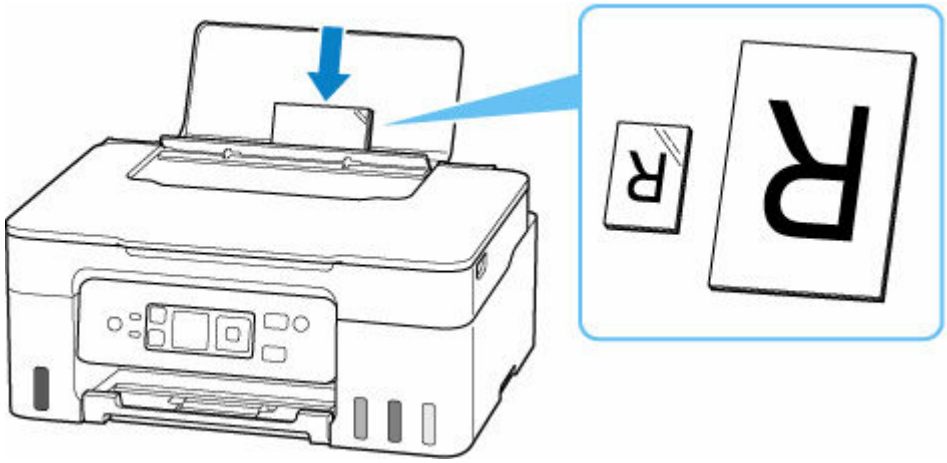

Important

- Always load paper in portrait orientation (C). Loading paper in landscape orientation (D) can cause paper jams.

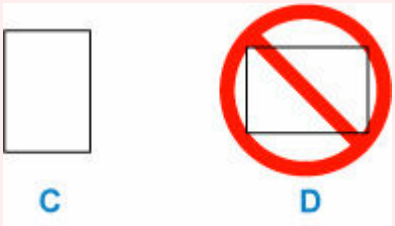

Note

- Check that the tip of paper comes up against the inner part of a feed slot when you load long-length paper. Depending on the weight of the paper, the leading edge may rise and printing may be shifted. Make sure that the leading edge of the paper does not rise, such as by holding the part that protrudes from the rear tray.

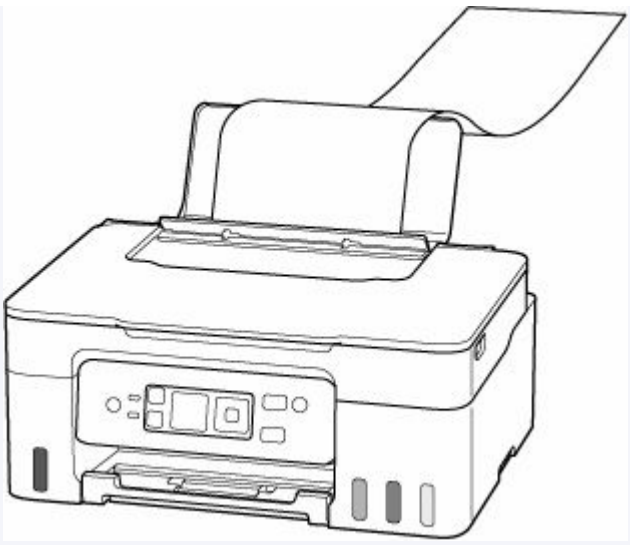

5. Move the right paper guide and adjust the guides to both edges of the paper stack.

Do not slide the paper guides too tightly against the paper. The paper may not be fed properly.

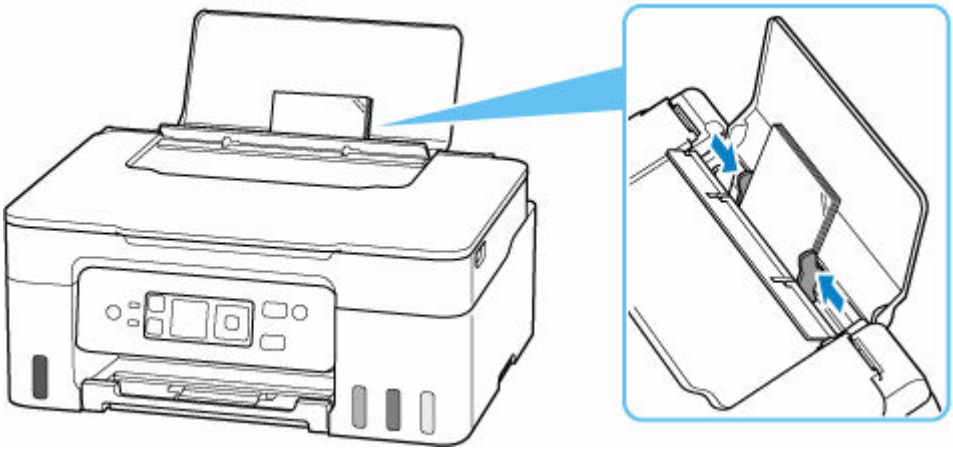

Note

- Do not load sheets of paper higher than the load limit mark (E).

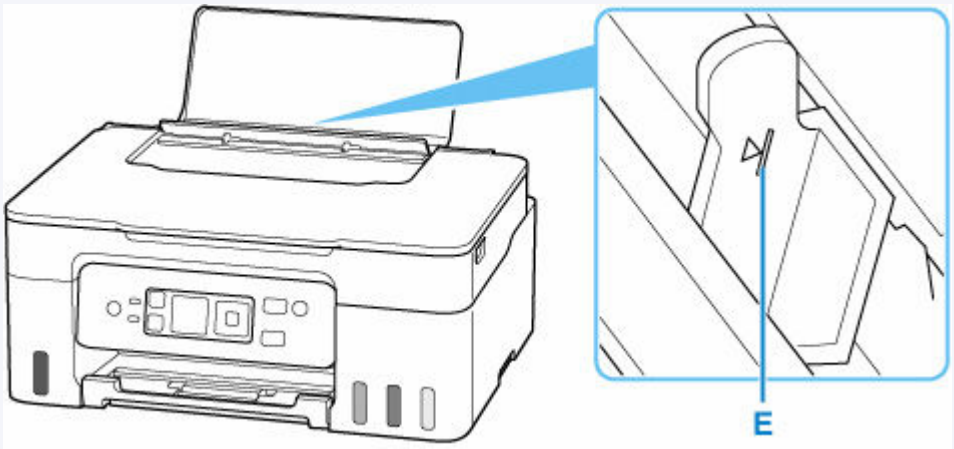

6. If page size and media type on LCD match size and type of paper loaded in rear tray, select **OK**.

   If not, select **Change** to change the settings in accordance with the size and type of the loaded paper.

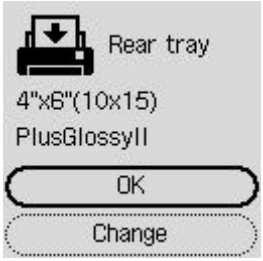

Note

- See Check paper replacement when you want to hide the screen for confirming the setting of paper.

7. Pull out the paper output tray (F) and open the output tray extension (G).

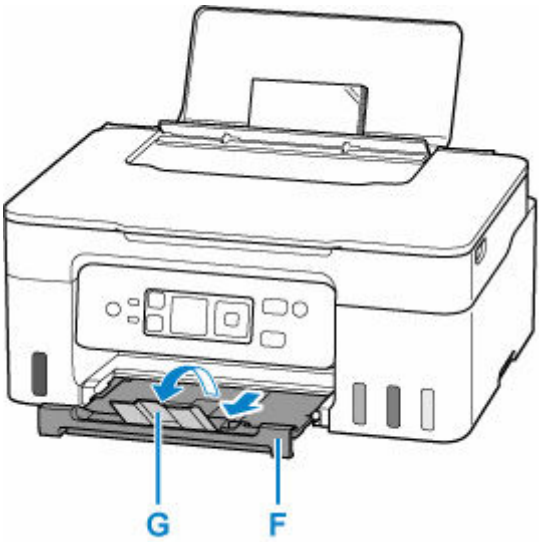

Note

- There are various types of paper, such as paper with a special surface coating for printing photos at optimal quality and paper suitable for documents. Each media type has specific preset settings (how ink is used and sprayed, distance from nozzles, etc.), that allow you to print to that type with optimal image quality. The wrong paper settings may cause poor printout color quality or scratches on the printed surface. If you notice blurring or uneven colors, increase the print quality setting and try printing again.
- To prevent incorrect printing, this printer has a function that detects whether the settings for the paper loaded on the rear tray matches the paper settings. Before printing, make print settings in accordance with the paper settings. When this function is enabled, an error message is displayed if these settings do not match to prevent incorrect printing. When this error message is displayed, check and correct the paper settings.

- When printing on long-length paper, support the output paper with your hands or use the printer in a place where the paper does not fall. If the paper falls, the printed side may become dirty or scratched. Also, when supporting the paper with hands, be sure not to pull the paper forcefully while printing.

Loading Envelopes

The address is automatically rotated and printed according to the envelope's direction by specifying with the printer driver properly.

Important

- Do not use the following envelopes. They could jam in the printer or cause the printer to malfunction.
  - Envelopes with an embossed or treated surface
  - Envelopes with a double flap
  - Envelopes whose gummed flaps are already moistened and adhesive

1. Prepare envelopes.

- Press down on all four corners and edges of the envelopes to flatten them.

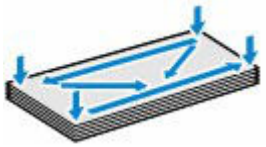

- If the envelopes are curled, hold the opposite corners and gently twist them in the opposite direction.

- If the corner of the envelope flap is folded, flatten it.
- Use a pen to press the leading edge in the inserting direction flat and sharpen the crease.

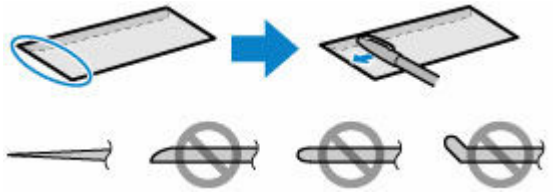

The figures above show a side view of the leading edge of the envelope.

Important

- The envelopes may jam in the printer if they are not flat or the edges are not aligned. Make sure that no curl or puff exceeds 0.12 in. (3 mm).

2. Open the paper support (A).

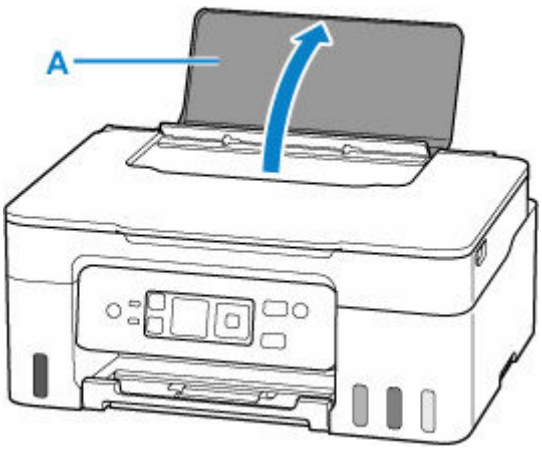

3. Slide right paper guide (B) to open both paper guides.

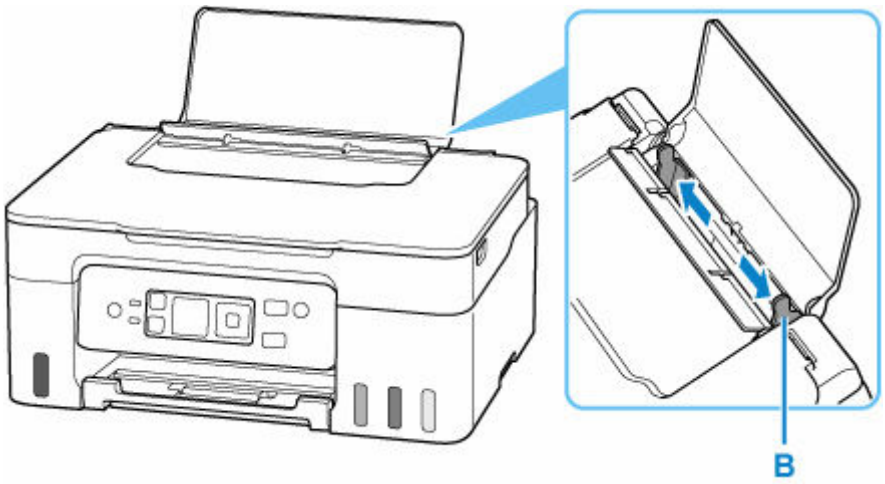

4. Load envelopes in portrait orientation WITH THE PRINT SIDE FACING UP.

   Up to 10 envelopes can be loaded at once.

   Fold flap of the envelope and load the envelope in portrait orientation with the address side facing up.

   After loading the envelopes, the paper setting confirmation screen for the rear tray appears on the LCD.

5. Move the right paper guide and adjust the guides to both edges of the envelopes.

   Do not slide the paper guides too tightly against the envelopes. The envelopes may not be fed properly.

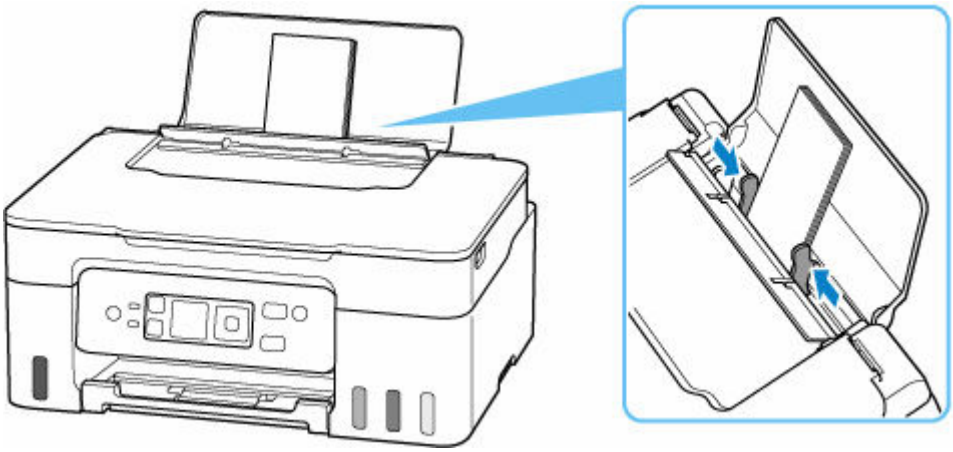

Note

- Do not load envelopes higher than the load limit mark (C).

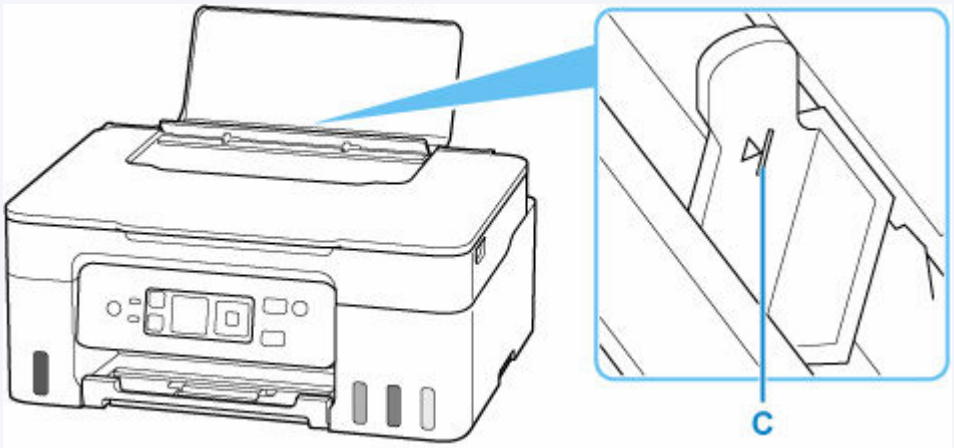

6. If page size and media type shown on LCD match size and type of envelopes loaded in rear tray, select **OK**.

If not, select **Change** to change the settings in accordance with the size and type of the loaded envelopes.

Note

- See Check paper replacement when you want to hide the screen for confirming the setting of paper.

7. Pull out the paper output tray (D) and open the output tray extension (E).

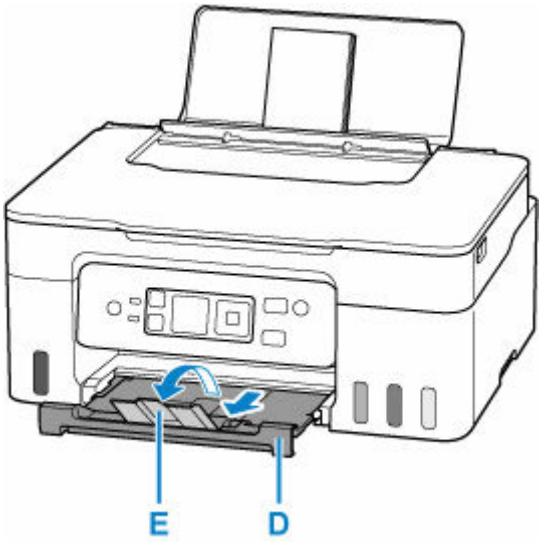

Note

- To prevent incorrect printing, this printer has a function that detects whether the settings for the paper loaded on the rear tray matches the paper settings. Before printing, make print settings in accordance with the paper settings. When this function is enabled, an error message is displayed if these settings do not match to prevent incorrect printing. When this error message is displayed, check and correct the paper settings.

Loading Originals

- Loading Originals on Platen
- Loading Based on Use
- Supported Originals
- How to Detach / Attach the Document Cover

Loading Originals on Platen

1. Open the document cover (A).

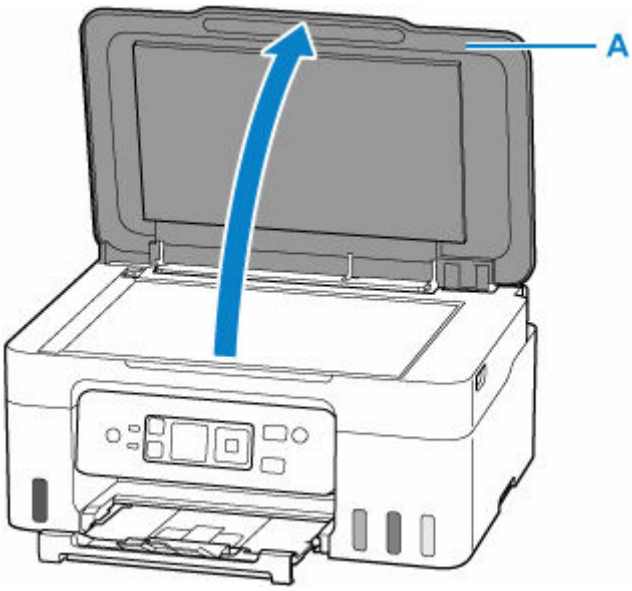

2. Load original WITH THE SIDE TO SCAN FACING DOWN on platen.

➡ Loading Based on Use
➡ Supported Originals

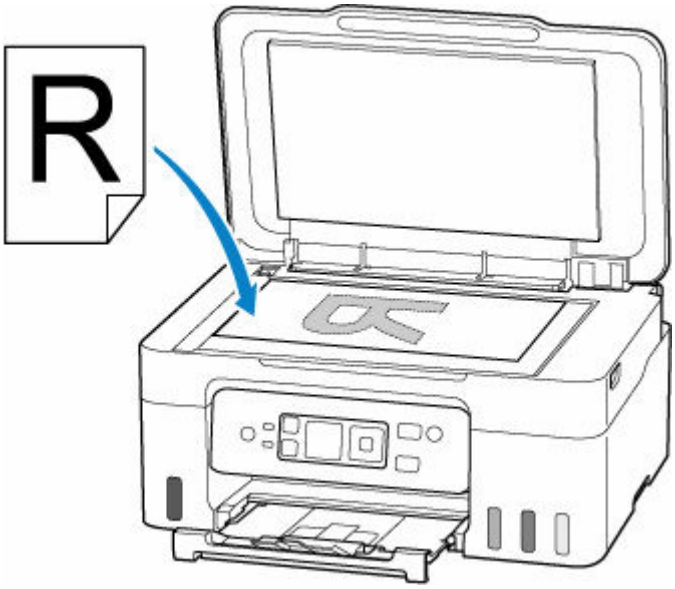

Important

- Be sure to observe the following when loading the original on the platen. Failure to observe the following may cause the scanner to malfunction or the platen glass to break.
  - Do not place any objects weighing 4.4 lb (2.0 kg) or more on the platen glass.
  - Do not put any pressure of 4.4 lb (2.0 kg) or more on the platen glass, such as pressing down the original.

3. Close the document cover gently.

Important

- After loading the original on the platen, be sure to close the document cover before starting to copy or scan.

Loading Based on Use

Load the original in the correct position according to the function to use. If you do not load the original correctly, it may not be scanned properly.

Originals	Function	How to Load
Magazines, Newspapers, and Documents	**Copying**	Loading the Original to Be Aligned with the alignment mark
	Scanning by detecting the type and size of the original automatically If you scan using the operation panel, select **Auto scan** for document type in **Scan**.	
	Scanning by specifying a standard size (A4, Letter, etc.) If you scan using the operation panel, select **Document** or **Photo** for document type in **Scan** and specify a standard size (A4, Letter, etc.) for **Scan size** to scan originals.	
Photos, Postcards, Business Cards, and Disc (BD/DVD/CD)	**Scanning only one original** If you scan using the operation panel, follow the operation below. • Select **Auto scan** for document type in **Scan**. • Select **Photo** for document type in **Scan** and specify **Auto scan** for **Scan size** to scan originals.	Loading Only One Original in Center of Platen
	Scanning two or more originals If you scan using the operation panel, follow the operation below. • Select **Auto scan** for document type in **Scan**. • Select **Photo** for document type in **Scan** and specify **Auto multi scan** for **Scan size** to scan two or more originals.	Loading Two or More Originals on Platen

Loading the Original to Be Aligned with the alignment mark

Place the original WITH THE SIDE TO SCAN FACING DOWN on the platen and align it with the alignment mark. Portions placed on the diagonally striped area cannot be scanned.

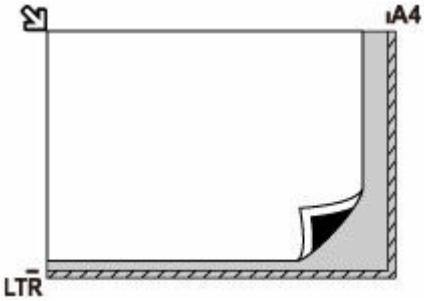

Important

- The printer cannot scan the striped area (A) (0.04 in. (1 mm) from the edges of the platen glass).

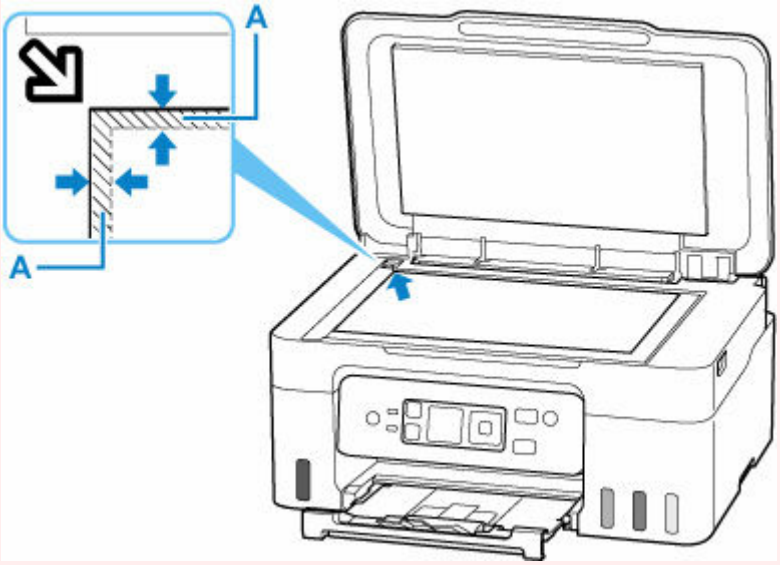

Loading Only One Original in Center of Platen

Place the original WITH THE SIDE TO SCAN FACING DOWN, with 0.40 in. (1 cm) or more space between the edges (diagonally striped area) of the platen. Portions placed on the diagonally striped area cannot be scanned.

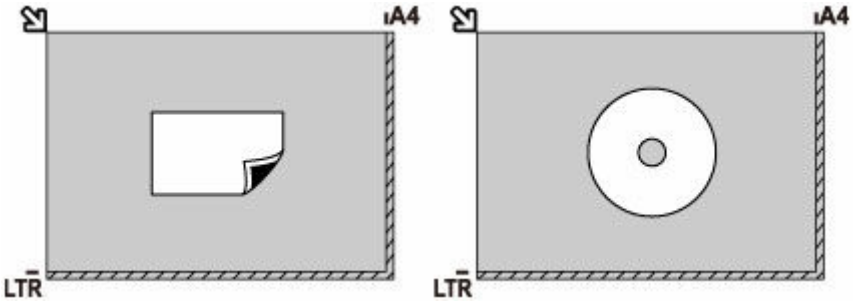

Loading Two or More Originals on Platen

Place the originals WITH THE SIDE TO SCAN FACING DOWN. Allow 0.40 in. (1 cm) or more space between the edges (diagonally striped area) of the platen and the originals, and between the originals. Portions placed on the diagonally striped area cannot be scanned.

You can place up to 12 items.

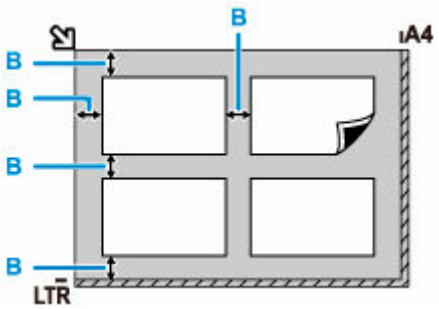

B: More than 0.40 in. (1 cm)

Note

- The Skew Correction function automatically compensates for the originals placed at an angle of up to approximately 10 degrees. Slanted photos with a long edge of 7.1 in. (180 mm) or more cannot be corrected.
- Non-rectangular or irregular shaped photos (such as cut out photos) may not be scanned properly.

Supported Originals

Item	Details
Types of originals	Text document, magazine, or newspaper Printed photo, postcard, business card, or disc (BD/DVD/CD, etc.)
Size (width x height)	Max. 8.5 x 11.7 in. (216 x 297 mm)

Note

- When loading a thick original such as a book on the platen, you can load it by removing the document cover from the printer.

  ➡ How to Detach / Attach the Document Cover

How to Detach / Attach the Document Cover

Detaching the document cover:

Hold up the document cover in portrait orientation and then tip it back.

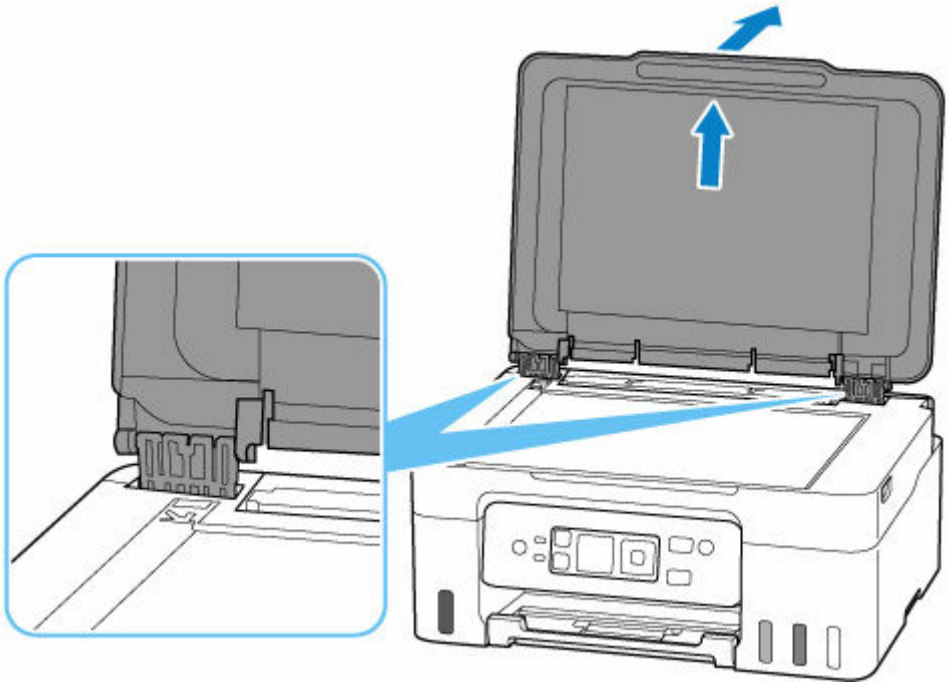

Attaching the document cover:

Fit both hinges (A) of the document cover into the holder (B) and insert both hinges of the document cover vertically.

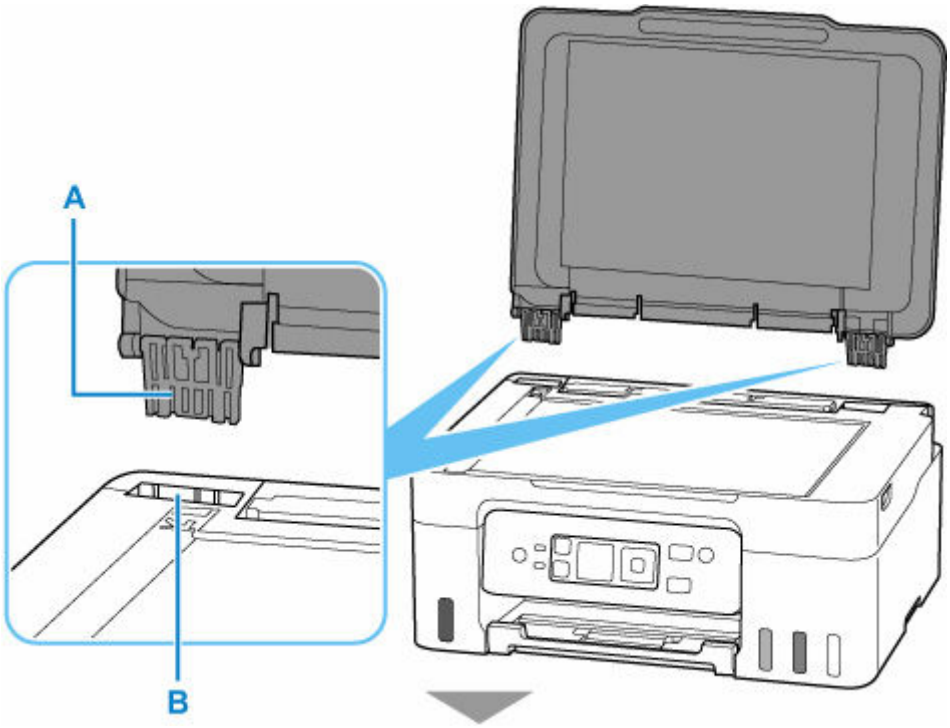

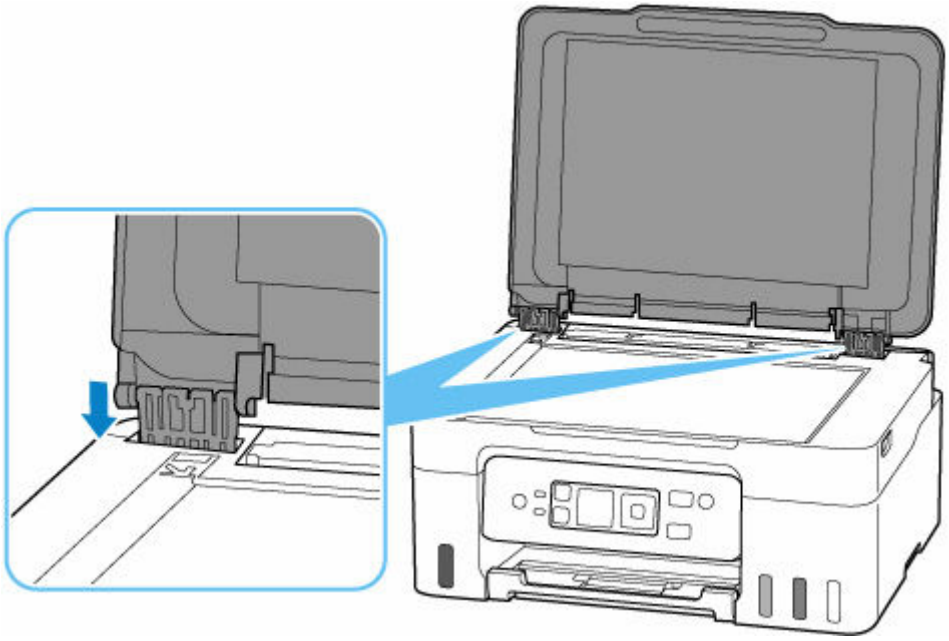

Refilling Ink Tanks

- Refilling Ink Tanks
- Checking Ink Level
- Ink Tips

Refilling Ink Tanks

When remaining ink cautions or errors occur, the message will appear on the LCD to inform you of the error. In this state, the printer cannot print. Check the remaining ink level with the ink tank indicator on the front of the printer. If the ink level is near the lower limit line (A), refill the ink tank.

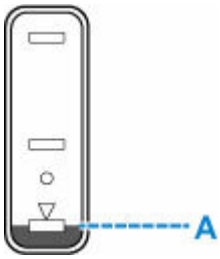

Important

- If the function for notifying the remaining ink level (remaining ink level notification function) is enabled, resetting the remaining ink level count is required after refilling ink tanks up to the upper limit line.

  If the remaining ink level count is reset when the ink tanks are not full, the printer cannot detect the ink level correctly.

  From the printer

  ➡ Ink level monitor

  From the computer

  ➡ Changing the remaining ink level notification setting
- If the remaining ink level notification function is disabled, visually inspect the remaining ink and refill the ink tanks as necessary. Continuing printing with ink below the lower limit line of an ink tank may prevent satisfactory print quality.

Note

- If print results become faint or streaks appear despite sufficient ink levels, see Maintenance Procedure.
- For precautionary notes on handling ink bottles, see Notes on ink bottles.

Refilling Procedure

When you refill ink tanks, follow the steps below.

Important

- Please ensure the printer remains flat after initial setup and is NOT turned upside down or on its side, as ink in the printer may leak.

1. Check that printer is turned on.

2. Open the scanning unit / cover (B).

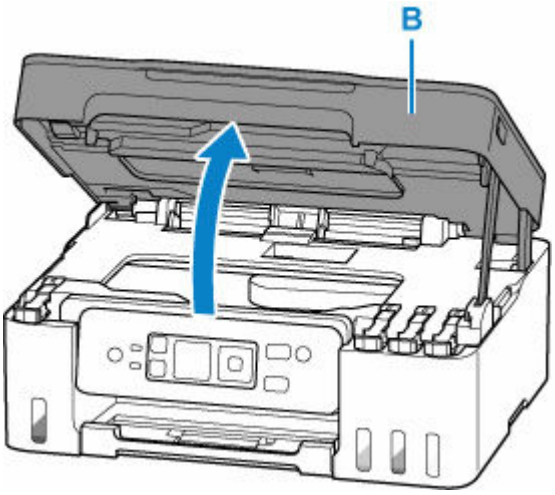

Important

- Do not touch tubes or other parts inside the printer. This can cause trouble with the printer.

3. Open the tank cap (C) of the ink tank to be refilled.

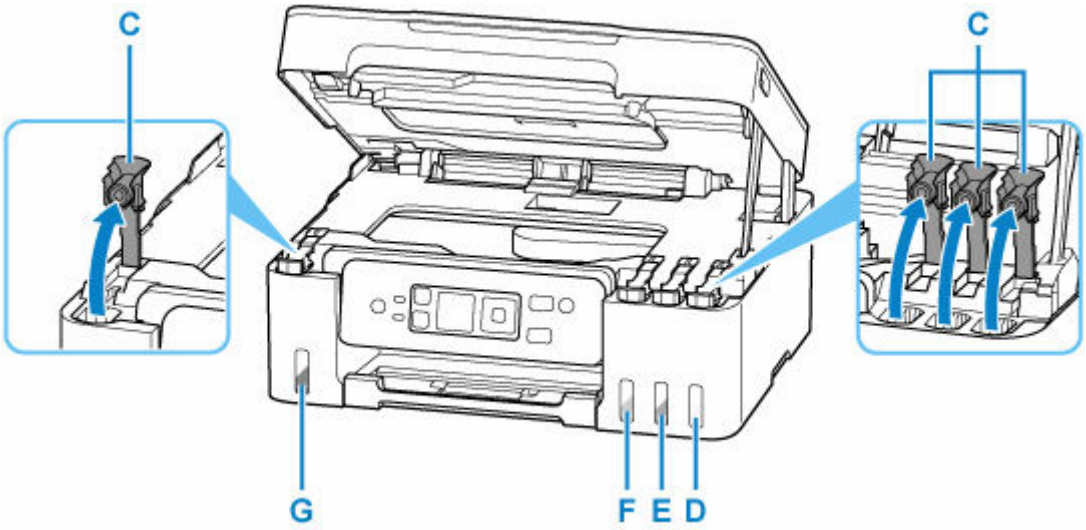

D: Yellow
E: Magenta
F: Cyan
G: Black

Important

- Carefully open the tank cap of the ink tank. Ink on the inside of the tank cap may spatter when opening it.

4. Hold the ink bottle upright and gently twist the bottle cap (H) to remove.

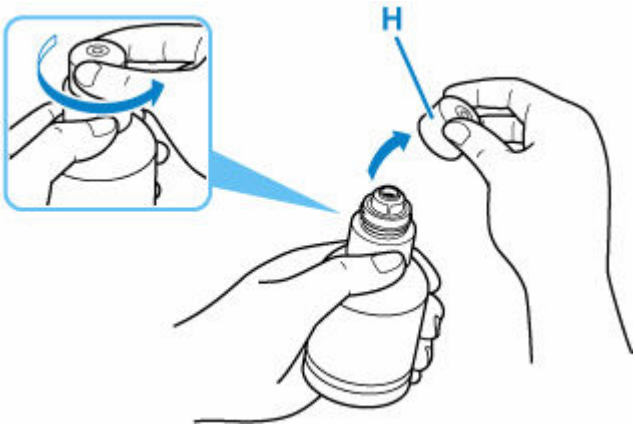

Important

- Do not shake the ink bottle. Ink may spatter when opening the cap.

5. Refill the ink tank.

Aligning the ink bottle's tip with the ink tank's inlet (I), slowly stand the bottle upside down, and push the bottle into the inlet.

The ink tank is refilled. Support the bottle with your hand so that it does not fall.

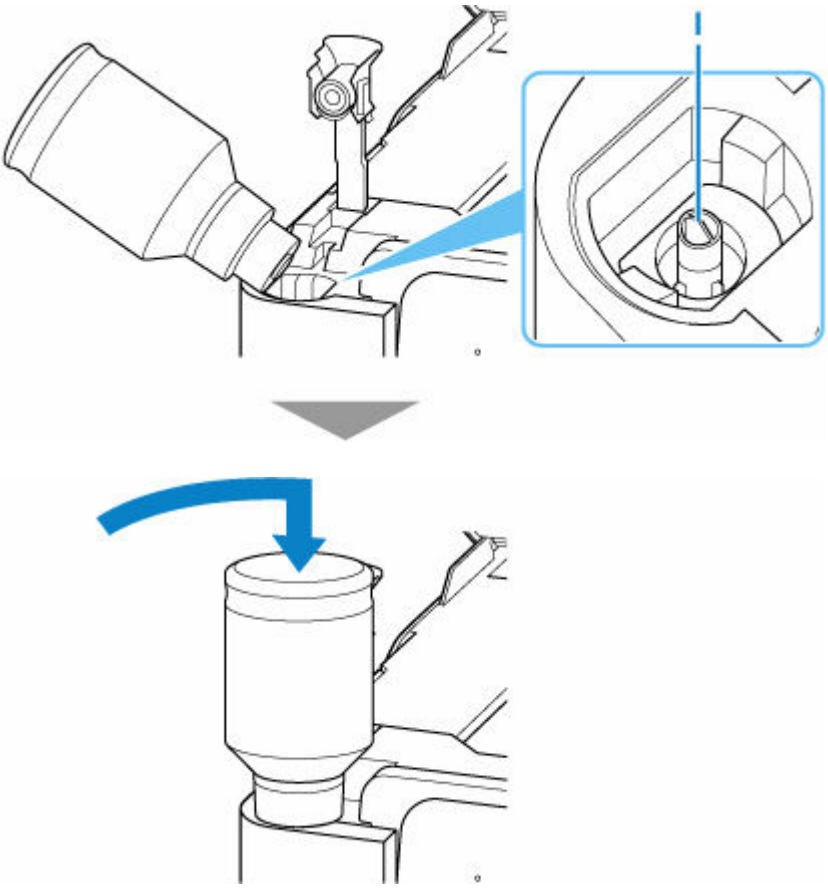

Important

- Make sure that each color of ink tanks is filled with corresponding color of ink bottles.
- If ink is not injected into the ink tank, slowly remove and insert the ink bottle.

- Make sure to refill the ink tank with ink up to the upper limit line (J) on the ink tank.

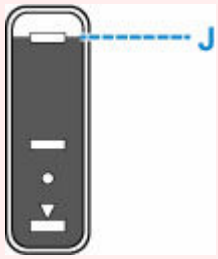

6. Once ink reaches the upper limit line, remove the ink bottle from the inlet.

Hold up the ink bottle slightly and remove the bottle from the inlet while slowly tilting it.

Important

- Do not leave ink bottles in ink tanks.
- Close the bottle cap of the ink bottle securely and store the ink bottle upright.

7. Close the tank cap of the ink tank.

Make sure the tank cap is completely inserted.

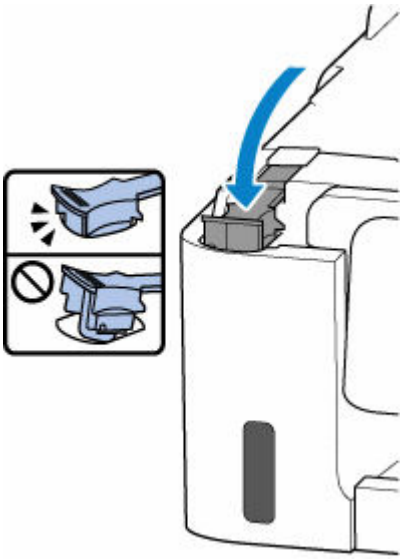

8. Close the scanning unit / cover.

To close the scanning unit / cover, lift it up slightly and then lower it gently.

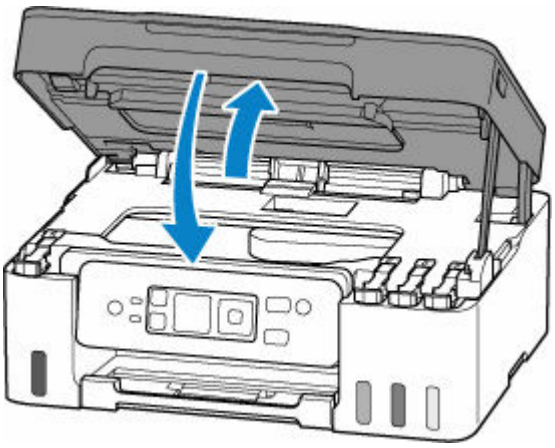

Notes on ink bottles

Important

- Keep out of reach of children.
- Do not drink ink.
- If ink is accidentally licked or swallowed, rinse out your mouth or drink one or two glasses of water and obtain medical advice immediately. If ink gets into your eyes, flush them with water right away, and obtain medical advice immediately.
- If ink gets on your skin, wash the area with soap and water immediately. If irritation to your skin persists, obtain medical advice immediately.
- When you store ink bottles, close bottle caps completely and place bottles in standing position. If the ink bottles are laid down, ink may leak.
- When refilling ink tanks, take sufficient care to prevent ink from spattering onto surroundings.
- Ink may stain clothes or other belongings permanently. Washing may not remove ink stains.
- Do not use ink bottles and ink contained therein except to refill tanks of printers specified by Canon.
- Do not leave ink bottles in areas exposed to high temperature, such as near fire or a heater or in a car. Bottles may warp and cause ink leakage or ink may become poor quality.
- Do not subject ink bottles to impacts. Ink bottles may be damaged or bottle caps may come off by such impact, and ink may leak.
- Do not transfer ink to other containers. This may result in accidental ingestion, inappropriate use, or poor ink quality.
- Do not mix ink with water or other ink. This may damage the printer.
- Once an ink bottle has been opened, do not leave it with bottle cap off. Ink will dry out, possibly preventing proper operation of the printer when an ink tank is refilled using this bottle.
- To obtain optimum print quality, we recommend to refill the ink tank with ink up to the upper limit line at least once a year.

Note

- Color ink may be consumed even when printing a black-and-white document or when black-and-white printing is specified. Every ink is also consumed in the standard cleaning and deep cleaning of the print head, which may be necessary to maintain the performance of the printer.

  When ink runs low, promptly refill it.

  ➡ Ink Tips

Checking Ink Level

Check ink level with the ink tank indicator on the front of the printer.

When ink reaches the upper limit line (A), ink is full.

When ink is near the lower limit line (B), ink is running low. Refill the ink tank.

Note

- To check the remaining ink level, visually inspect the remaining ink in the ink tank.

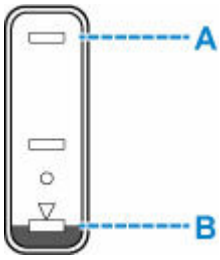

Important

- If printing is continued when the remaining ink level is below the lower limit line, the printer may consume a certain amount of ink to return to printable status.

Note

- This printer has a function for notifying the remaining ink level, called the remaining ink level notification function. If you refill the ink tank when the remaining ink level notification function is enabled or when a remaining ink error occurs, refill the ink tank until the ink reaches the upper limit line. If ink does not reach the upper limit line, the remaining ink level is not detected correctly.

  For details on the remaining ink level notification function, see below.

  ➡ Ink level monitor

- If a remaining ink error occurs, the error message appears on the LCD.

  ➡ When Error Occurred

- The remaining ink level notification function works from initial printing to the time when one of the inks reaches the lower limit line shown on the ink tank. For the remaining ink level notification function to work appropriately, each ink tank must be filled with entire contents of the corresponding color ink bottle bundled with the printer before printing. After the initial filling, if either of the ink tanks is refilled before the remaining ink level reaches the lower limit line, a significant error may occur in the accuracy of the remaining ink level notification function. If you want to refill an ink tank before the remaining ink level reaches the lower limit line, be sure to follow the procedure in the manual.
- To ensure you receive premium print quality and to help protect your print head, a certain amount of ink remains in the ink tank when the printer indicates to refill the ink tank. The estimated page yields of the ink bottle do not include this amount.
- Ink flows from the ink tanks to the inside of the printer. Ink may seem to run out fast due to this procedure when you start using the printer or after transporting it.

Ink Tips

How is ink used for various purposes other than printing?

Ink may be used for purposes other than printing.

During initial setup, some of the ink from the bundled ink bottles is used to fill the print head's nozzles to ensure the printer is print-ready.

Therefore, the page yield of the initial bundled set of ink bottles is lower than that of the subsequent sets of bottles.

To keep printer's performance, Canon printer performs cleaning automatically according to its condition. When the printer performs cleaning, a small amount of ink is consumed. In this case, all colors of ink may be consumed.

[Cleaning function]

The cleaning function helps the printer to suck air bubbles or ink itself from the nozzle and thus prevents print quality degradation or nozzle clogging.

Important

- The used ink is ejected into the maintenance cartridge. When the maintenance cartridge becomes full, replacement is necessary. If a message is displayed indicating that the maintenance cartridge is nearly full, replace the maintenance cartridge as soon as possible.

  ➡ Replacing the Maintenance Cartridge

Does black-and-white printing use color ink?

Black-and-white printing may use ink other than black ink depending on the type of printing paper or the settings of the printer driver. So, color ink is consumed even when printing in black-and-white.

Similarly, color inks are also consumed along with black ink during print head cleaning when Black is specified for cleaning.

If Printing Is Faint or Uneven

- Maintenance Procedure
- Printing the Nozzle Check Pattern
- Examining the Nozzle Check Pattern
- Cleaning the Print Head
- Deep Print Head Cleaning
- Aligning the Print Head

Maintenance Procedure

If print results are blurred, colors are not printed correctly, or print results are unsatisfactory (e.g. misaligned printed ruled lines), perform the maintenance procedure below.

Important

- Do not rinse or wipe the print head. This can cause trouble with the print head.

Note

- Check if ink remains in the ink tanks.
  - ➡ Checking Ink Level
- For Windows, increasing the print quality in the printer driver settings may improve the print result.
  - ➡ Set Media Type, Quality, etc. (Media/Quality Tab)

When the Print Results Are Blurred or Uneven:

Step 1 Print the nozzle check pattern.

From the printer

➡ Printing the Nozzle Check Pattern

From the computer

- For Windows:
  - ➡ Printing a Nozzle Check Pattern
- For macOS:
  - ➡ Printing a Nozzle Check Pattern

Step 2 Examine the nozzle check pattern.

If there are missing lines or horizontal streaks in the pattern:

Step 3 Clean the print head.

From the printer

➡ Cleaning the Print Head

From the computer

- For Windows:
  - ➡ Cleaning the Print Heads
- For macOS:
  - ➡ Cleaning the Print Heads

After cleaning the print head, print and examine the nozzle check pattern: ➡ Step 1

If the problem is not resolved after performing from step 1 to step 3 twice:

Step 4 Clean the print head deeply.

From the printer

➡ Deep Print Head Cleaning

From the computer

- For Windows:
  - ➡ Cleaning the Print Heads
- For macOS:
  - ➡ Cleaning the Print Heads

After deep print head cleaning, print and examine the nozzle check pattern: ➡ Step 1

When you have performed the procedure until step 4 and the problem has not been resolved, turn off the power and clean the print head deeply again after 24 hours.

If the problem is still not resolved, replace ink in print head.

Important

- Replace ink in print head consumes a great amount of ink. Frequent replace ink in print head can rapidly consume ink, so replace ink in print head only when necessary.
- Be sure to check the remaining ink level before replacing ink in print head.

➡ Replace Ink in Print Head

If the nozzle check pattern is not printed correctly even after replacing ink in print head, see Check Installation of Print Head.

When the Print Results Are Not Even such as the Ruled Lines Are Misaligned:

Step Align the print head.

From the printer

➡ Aligning the Print Head

From the computer

- For Windows:
  - ➡ Adjusting Print Head Position Manually
- For macOS:
  - ➡ Adjusting Print Head Position

Printing the Nozzle Check Pattern

Print the nozzle check pattern to determine whether the ink ejects properly from the print head nozzle.

Note

- If the remaining ink level is low, the nozzle check pattern will not be printed correctly. Refill the ink tanks whose ink is low.

You need to prepare: a sheet of A4 or Letter-sized plain paper

1. Check that printer is turned on.

2. Load a sheet of A4 or Letter-sized plain paper in the rear tray.

   ➡ Loading Photo Paper / Plain Paper

3. Select **Maintenance** on the HOME screen.

   ➡ LCD and Operation Panel

4. Select **Nozzle Check**.

   The confirmation screen will appear.

5. Select **Yes**.

6. Press the **OK** button.

   The nozzle check pattern will be printed and the confirmation screen will appear on the LCD.

7. Select **Next**.

8. Examine the nozzle check pattern.

Examining the Nozzle Check Pattern

Examine the nozzle check pattern, and clean the print head if necessary.

1. Check if there are missing lines in the pattern C or horizontal streaks in the pattern D.

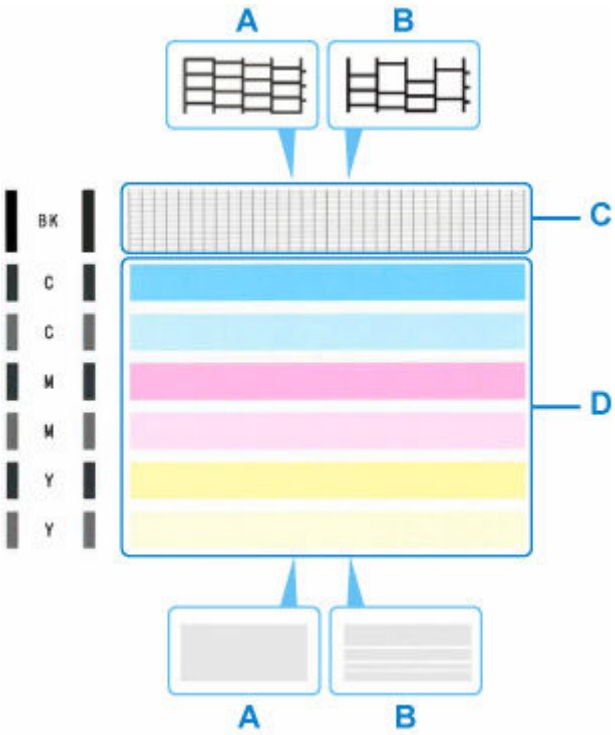

A: No missing lines/No horizontal streaks
B: Lines are missing/Horizontal streaks are present

2. Select the pattern that is closer to the printed nozzle check pattern on the confirmation screen.

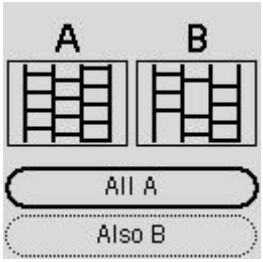

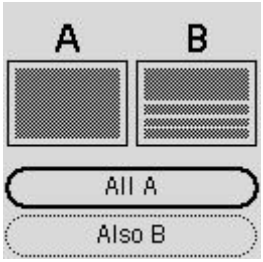

For A (no missing lines or no horizontal streaks) in both the pattern C and pattern D:

The cleaning is not required. Select **All A**, confirm the message, then select **OK**.

The screen will return to the maintenance screen.

For B (lines are missing or horizontal streaks are present) in the pattern C or pattern D, or in both patterns:

The cleaning is required. Select **Also B**, then select **Yes** on the cleaning confirmation screen.

The printer starts cleaning the print head.

➡ Cleaning the Print Head

If the pattern C or any color in the pattern D is not printed:

(Example: Magenta pattern is not printed)

The cleaning is required. Select **Also B**, then select **Yes** on the cleaning confirmation screen.

The printer starts cleaning the print head.

➡ Cleaning the Print Head

Cleaning the Print Head

Clean the print head if lines are missing or if horizontal streaks are present in the printed nozzle check pattern. Cleaning unclogs the nozzles and restores the print head condition. Cleaning the print head consumes ink, so clean the print head only when necessary.

Important

- When performing the print head cleaning, check the free space in the maintenance cartridge. If there is not enough free space, replace with the new maintenance cartridge. In the case of shortage of free space in the maintenance cartridge, a message is displayed and the cleaning cannot be performed.

You need to prepare: a sheet of A4 or Letter-sized plain paper

1. Check that printer is turned on.

2. Load a sheet of A4 or Letter-sized plain paper in the rear tray.

   ➡ Loading Photo Paper / Plain Paper

3. Select **Maintenance** on the HOME screen.

   ➡ LCD and Operation Panel

4. Select **Cleaning**.

   The confirmation screen will appear.

5. Select **Yes**.

   The printer starts cleaning the print head.

   Do not perform any other operations until the printer completes the cleaning of the print head. This takes about 1 to 2 minutes.

   The pattern print confirmation screen will appear.

6. Select **Yes**.

7. Press the **OK** button.

   The nozzle check pattern will be printed.

8. Select **Next**.

9. Examine the nozzle check pattern.

Note

- If the problem is not resolved after cleaning the print head twice, clean the print head deeply.

Deep Print Head Cleaning

If print quality does not improve by the standard cleaning of the print head, clean the print head deeply. Cleaning the print head deeply consumes more ink than the standard cleaning of the print head, so clean the print head deeply only when necessary.

Important

- When performing the print head deep cleaning, check the free space in the maintenance cartridge. If there is not enough free space, replace with the new maintenance cartridge. In the case of shortage of free space in the maintenance cartridge, a message is displayed and the cleaning cannot be performed.

You need to prepare: a sheet of A4 or Letter-sized plain paper

1. Check that printer is turned on.

2. Load a sheet of A4 or Letter-sized plain paper in the rear tray.

   ➡ Loading Photo Paper / Plain Paper

3. Select **Maintenance** on the HOME screen.

   ➡ LCD and Operation Panel

4. Select **Deep Cleaning**.

   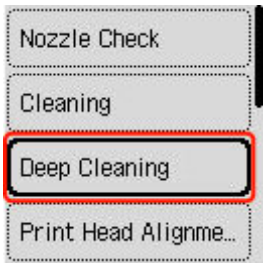

   The confirmation screen will appear.

5. Select **Yes**.

   The printer starts cleaning the print head deeply.

   Do not perform any other operations until the printer completes the deep cleaning of the print head. This takes about 3 minutes.

   The pattern print confirmation screen will appear.

6. Select **Yes**.

7. Press the **OK** button.

   The nozzle check pattern will be printed.

8. When the completion message appears, select **OK**.

9. Examine the nozzle check pattern.

If the problem is not resolved, turn off the power and clean the print head deeply again after 24 hours.

Aligning the Print Head

If printed ruled lines are misaligned or print results are otherwise unsatisfactory, adjust the print head position.

Note

- If the remaining ink level is low, the print head alignment sheet will not be printed correctly.

  If the remaining ink level is low, refill ink tanks.
- If ink runs out as the print head alignment sheet is printed, an error message appears on the LCD.

  ➡ When Error Occurred

You need to prepare: a sheet of A4 or Letter-sized plain paper

1. Check that printer is turned on.

2. Load a sheet of A4 or Letter-sized plain paper in the rear tray.

   ➡ Loading Photo Paper / Plain Paper

3. Select **Maintenance** on the HOME screen.

   ➡ LCD and Operation Panel

4. Select **Print Head Alignment - Auto**.

   The confirmation screen will appear.

   Note

   - To print and check the current head position adjustment values, select **Print the head alignment value**.

5. Select **Yes**.

6. Press the **OK** button.

   The print head alignment sheet will be printed.

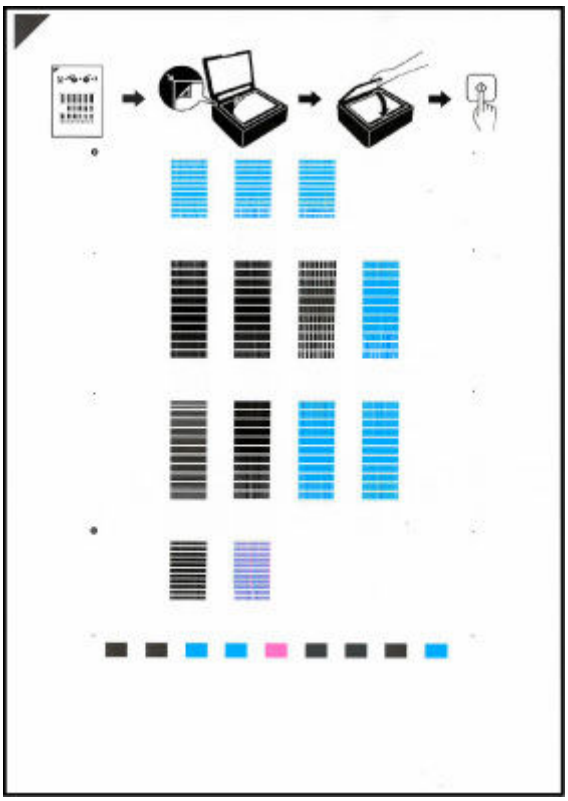

Important

- Do not touch any printed part on the print head alignment sheet. If the sheet is stained or wrinkled, it may not be scanned properly.

7. Confirm the message, then place print head alignment sheet on platen.

Place the print head alignment sheet WITH THE PRINTED SIDE FACING DOWN and align the mark ◤ on the upper left corner of the sheet with the alignment mark ⇲.

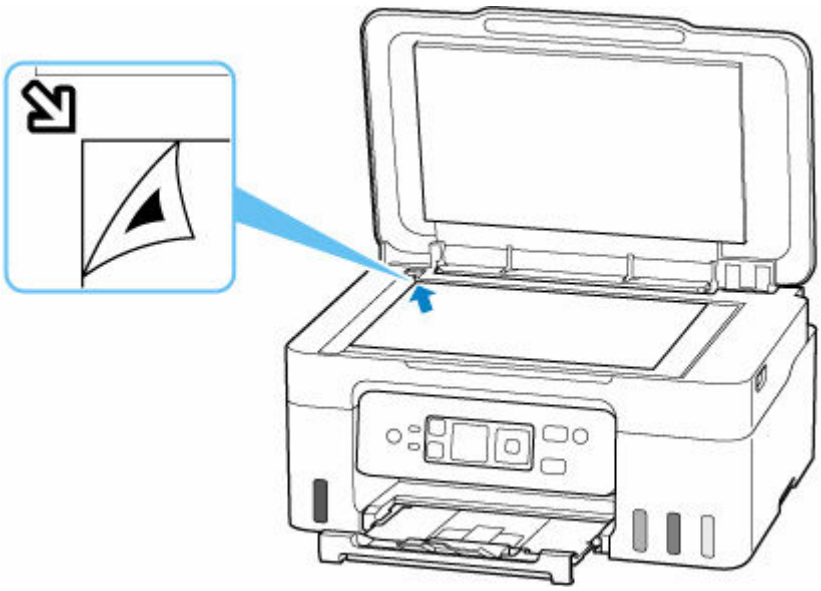

8. Close the document cover gently, then press the **OK** button.

The printer starts scanning the print head alignment sheet, and the print head position will be adjusted automatically.

When the print head position adjustment is completed, remove the print head alignment sheet from the platen.

Important

- Do not open the document cover or move the print head alignment sheet on the platen until adjusting the print head position is complete.
- If an error message is displayed on the LCD, press the **OK** button to release the error, then take appropriate action.

  ➡ When Error Occurred

9. When the completion message appears, select **OK**.

Note

- For Windows, when the print results are still not satisfactory after adjusting the print head position as described above, adjust the print head position manually from the computer.

  ➡ Adjusting Print Head Position Manually

Performing Maintenance Functions from Your Computer (macOS)

- Opening Remote UI for Maintenance
- Cleaning the Print Heads
- Adjusting Print Head Position

Opening Remote UI for Maintenance

You can perform maintenance of printer and change the settings from a Remote UI.
The following is the procedure to open a Remote UI.

1. Open **System Preferences**, and select **Printers & Scanners**

2. Select your model from the printer list, and click **Options & Supplies...**

3. Click **Show Printer Webpage...** in **General** tab

   Remote UI starts.

   Note

   - The password may have to be entered after Remote UI starts. In such a case, enter the password and click **OK**. In case you do not know the password, see "Passwords and cookies."

Related Topics

- Cleaning the Print Heads
- Adjusting Print Head Position
- Printing a Nozzle Check Pattern
- Managing the Printer Power
- Changing the Printer Operation Mode
- Reducing the Printer Noise

Cleaning the Print Heads

The print head Cleaning and Deep Cleaning functions allow you to clear up clogged print head nozzles. Perform print head Cleaning if printing results are not satisfactory or if a specific color fails to print, even though there is enough ink.
Before performing any operation, confirm that the maintenance cartridge has enough available space.

Cleaning

1. Select **Utilities** from Remote UI

2. Click **Cleaning**

   Before performing Cleaning, check that the printer power is on.
   Check the following. Then, if necessary, perform Cleaning.

   - Is there ink remaining?

3. Perform Cleaning

   Click **Yes**.

   Print head Cleaning starts.

4. Complete Cleaning

   Next, the message for Nozzle Check pattern printing is displayed.

5. Check the results

   To check whether the print quality has improved, click **Yes**. To cancel the check process, click **No**.

   If cleaning the head once does not resolve the print head problem, clean it once more.

Important

- **Cleaning** consumes a small amount of ink.
  Cleaning the print head frequently will rapidly deplete your printer's ink supply. Perform Cleaning only when necessary.

Deep Cleaning

Deep Cleaning is more thorough than Cleaning. Perform Deep Cleaning when two **Cleaning** attempts do not resolve the print head problem.

1. Select **Utilities** from Remote UI

2. Click **Deep Cleaning**

   Before performing Deep Cleaning, check that the printer power is on.
   Check the following. Then, if necessary, perform Deep Cleaning.

- Is there ink remaining?

3. Perform Deep Cleaning

   Click **Yes**.

   Print head Deep Cleaning starts.

4. Complete Deep Cleaning

   Next, the message for Nozzle Check pattern printing is displayed.

5. Check the results

   To check whether the print quality has improved, click **Yes**. To cancel the check process, click **No**.

Important

- **Deep Cleaning** consumes a larger amount of ink than **Cleaning**.
  Cleaning the print head frequently will rapidly deplete your printer's ink supply. Perform Deep Cleaning only when necessary.

Related Topic

➡ Printing a Nozzle Check Pattern

Adjusting Print Head Position

Any error in the print head installation position can cause color and line shifts. Adjusting the print head position improves print results.

Print Head Alignment - Auto

1. Select **Utilities** from Remote UI

2. Click **Print Head Alignment - Auto**

   A message appears.

3. Load paper in printer

   Load one sheet of A4 size or Letter size plain paper into the rear tray.

4. Run head position adjustment

   Check that the printer power is on, and then click **Yes**.
   Head alignment starts. Proceed with the operations in accordance with the messages on the screen.

   Important

   - Do not open the scanning unit / cover while printing is in progress; otherwise, printing will stop.

Note

- You can print and check the current settings by clicking on **Print the head alignment value**.

Cleaning

- Cleaning Exterior Surfaces
- Cleaning Platen and Document Cover
- Cleaning Paper Feed Rollers
- Cleaning Inside the Printer (Bottom Plate Cleaning)

Cleaning Paper Feed Rollers

If a paper feed roller is dirty or paper powder is attached to it, paper may not be fed properly. In this case, perform Roller Cleaning. Cleaning will cause wear on rollers, so perform this only when necessary.

You need to prepare: three sheets of A4 or Letter-sized plain paper

1. Check that printer is turned on.

2. Select **Maintenance** on the HOME screen.

   ➡ LCD and Operation Panel

3. Select **Roller cleaning**.

   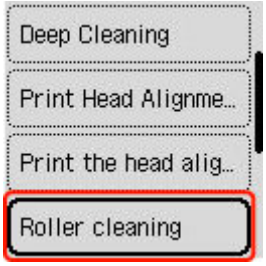

   The confirmation screen will appear.

4. Select **Yes**.

5. Remove any paper from the rear tray.

6. Press the **OK** button.

   The paper feed rollers will rotate as they are cleaned without paper.

7. Make sure that the paper feed roller has stopped rotating, then follow the message to load the three sheets of A4 or Letter-sized plain paper.

   ➡ Loading Photo Paper / Plain Paper

8. Press the **OK** button.

   The printer starts cleaning. The cleaning will be complete when the paper is ejected.

9. When the completion message appears, select **OK**.

If the problem is still not resolved with the operation described above, follow the operation below.

1. Turn off the power and then unplug the power cord.
2. Open the scanning unit / cover.
3. While rotating the paper feed roller (A) located inside the rear tray more than two full turns, wipe it with a well wrung out damp cloth.

Do not touch the roller with your fingers. Paper feeding performance may be degraded.

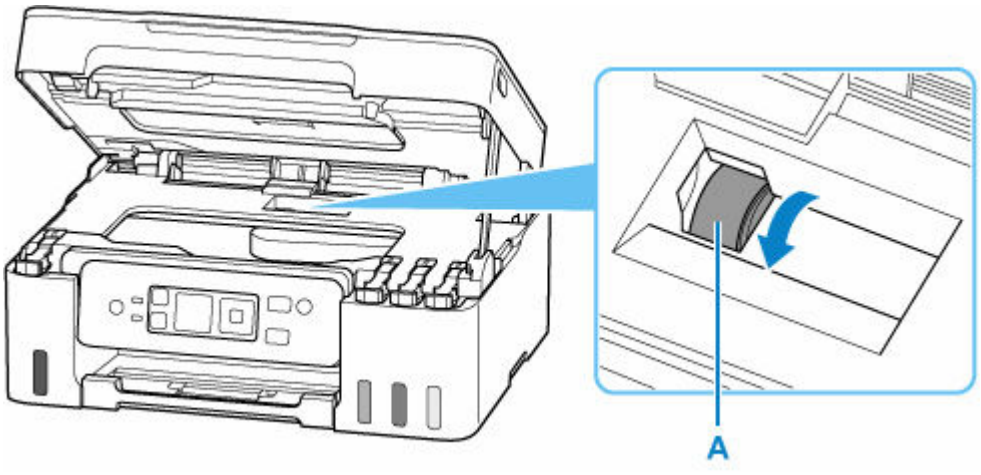

If the problem is not resolved after cleaning, contact Canon to request a repair.

Cleaning Inside the Printer (Bottom Plate Cleaning)

Remove stains from the inside of the printer. If the inside of the printer becomes dirty, printed paper may get dirty, so we recommend performing cleaning regularly.

You need to prepare: a sheet of A4 or Letter-sized plain paper*

* Be sure to use a new piece of paper.

1. Check that printer is turned on.

2. Select **Maintenance** on the HOME screen.

   ➡ LCD and Operation Panel

3. Select **Bottom plate cleaning**.

   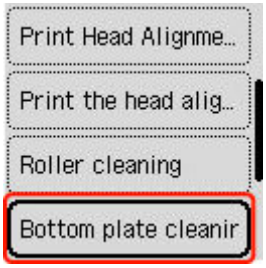

   The confirmation screen will appear.

4. Select **Yes**.

5. Follow the message to remove any paper from the rear tray, then press the **OK** button.

6. Fold a single sheet of A4 or Letter-sized plain paper in half widthwise, then unfold the paper.

7. Fold one side of the opened paper in another half, aligning the edge with the center crease, unfold the paper, then press the **OK** button.

   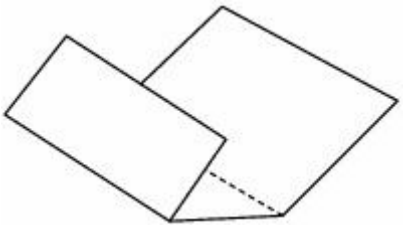

8. Load only this sheet of paper on the rear tray so that the wider folding margin is put down with the opened surface (valley fold) upward.

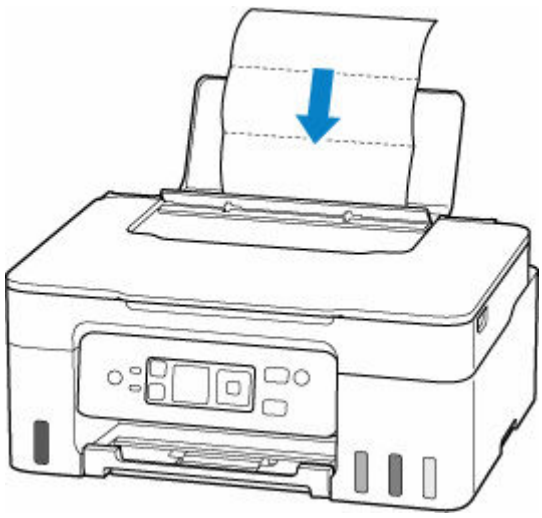

9. Pull out the paper output tray (A) and open the output tray extension (B).

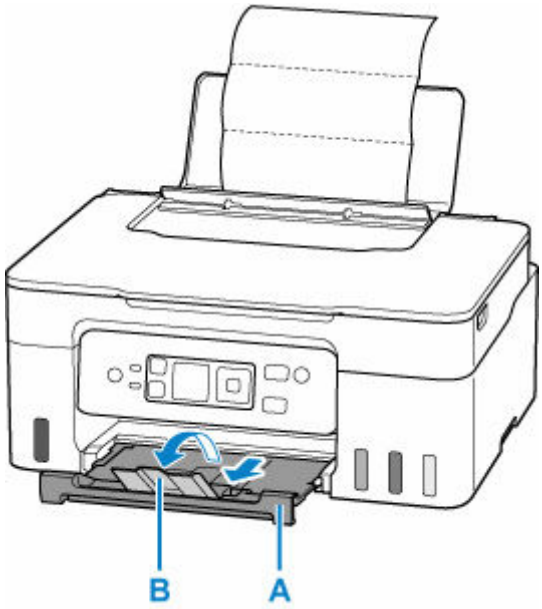

10. Press the **OK** button.

    The paper cleans the inside of the printer as it feeds through the printer.

    Check the folded parts of the ejected paper. If they are smudged with ink, perform Bottom Plate Cleaning again.

11. When the completion message appears, select **OK**.

Note

- When performing Bottom Plate Cleaning again, be sure to use a new piece of paper.

If the problem is not resolved after performing cleaning again, the protrusions inside the printer may be stained. Wipe off any ink from the protrusions using a cotton swab or the like.

Important

- Be sure to turn off the power and unplug the power cord before cleaning the printer.

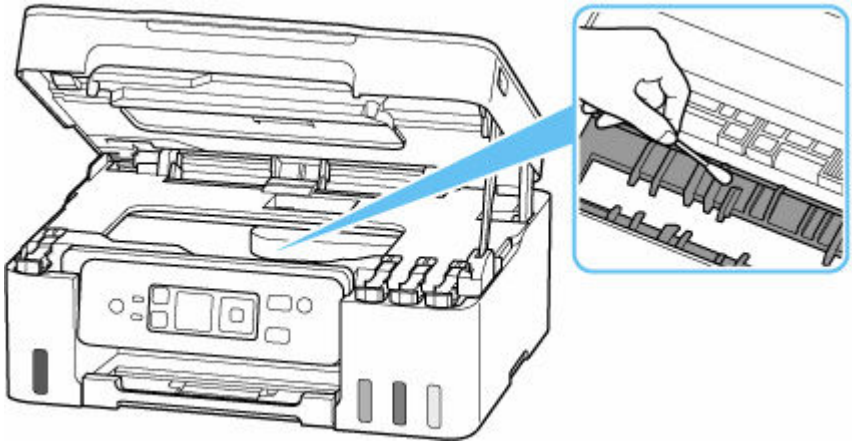

Replacing the Maintenance Cartridge

In case of cautions or errors concerning the maintenance cartridge, an error message will appear on the LCD to inform you of the error. Take appropriate action as prompted by the message.

➡ When Error Occurred

Important

- If a message is displayed indicating that the maintenance cartridge is nearly full, replace the maintenance cartridge as soon as possible. If the maintenance cartridge becomes full, an error message is displayed and the printer stops working until the cartridge is replaced with a new one.
- Do not touch the terminal (A) or opening (B) of the maintenance cartridge.

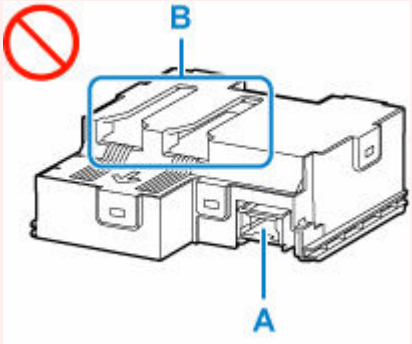

Note

- Use a maintenance cartridge with the model number below.

  Maintenance Cartridge MC-G04

1. Prepare a new maintenance cartridge.

   Remove the maintenance cartridge and the attached plastic bag from the package.

2. Turn the printer off.

3. Remove the coin screw from the maintenance cover (C).

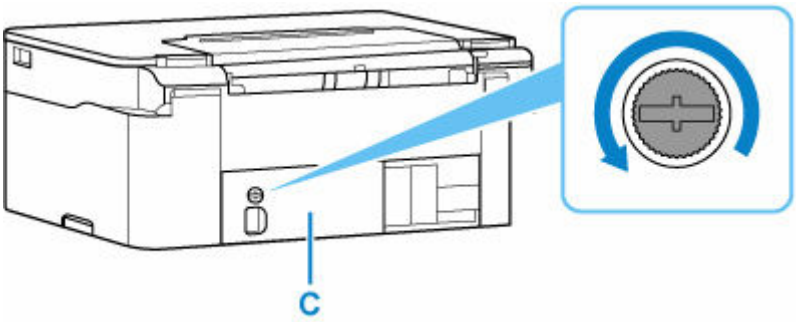

4. Remove the maintenance cover.

   Put your finger on the hole of the maintenance cover and remove it.

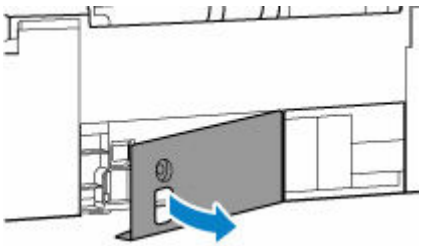

5. Pull out the maintenance cartridge until it stops.

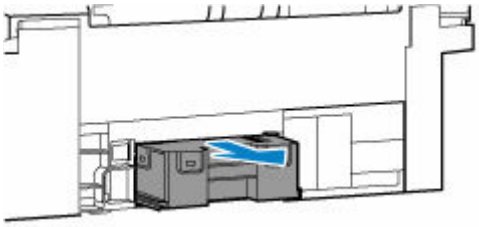

6. Lift the maintenance cartridge a little and pull it out.

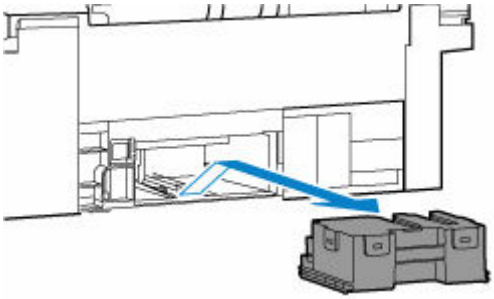

Important

- Do not drop the removed maintenance cartridge as ink may spill.

  Do not place the removed maintenance cartridge on a desk or other surface, as there may be ink on the bottom of the cartridge.

- To prevent ink from leaking, do not tilt the removed maintenance cartridge or turn it upside down.

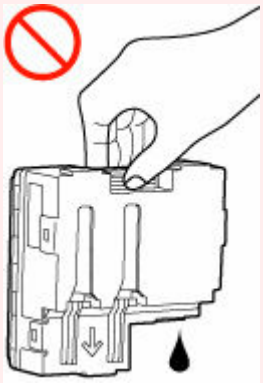

- Put the used one immediately into the plastic bag that came with the new maintenance cartridge and seal the bag by tying the opening tightly to prevent the ink from leaking.

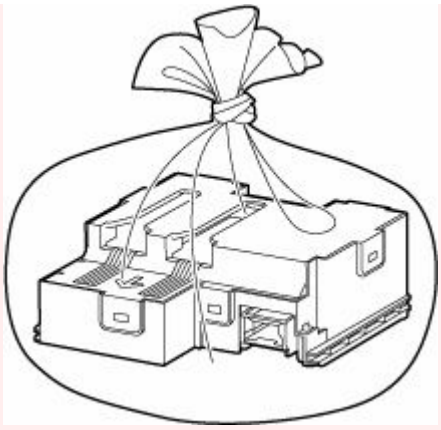

- Do not put your hands inside the printer, as ink may adhere to your hands.

7. Insert the new maintenance cartridge straight until it stops.

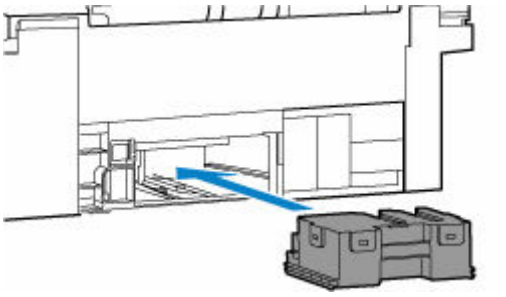

8. Attach the maintenance cover.

Align the tab on the back of the maintenance cover with the hole on the printer and close it.

9. Secure with the coin screw.

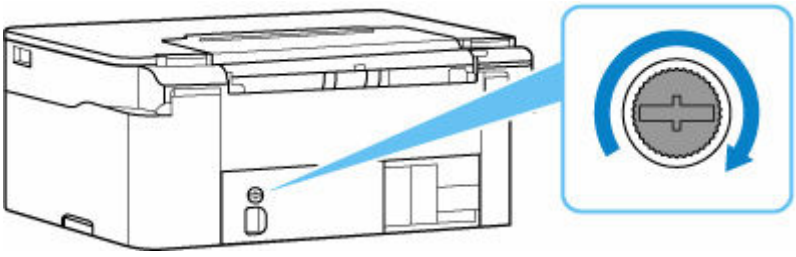

10. Turn the printer on.

Checking Maintenance Cartridge Status on LCD

1. Check that printer is turned on.

2. Select **Printer details** on the HOME screen.

   ➡ LCD and Operation Panel

3. Select **M'ntenance cart info**.

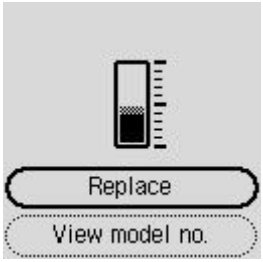

A symbol appears in the area A if there is any information about the used space of the maintenance cartridge.

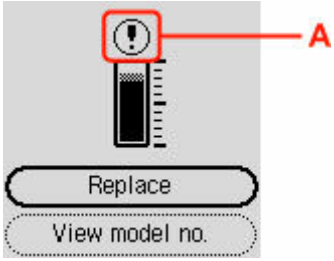

The maintenance cartridge is almost full. Replace the maintenance cartridge as soon as possible.

The maintenance cartridge is full. Replace the maintenance cartridge.

Note

- The above screen shows estimated used space.
- To replace the maintenance cartridge, select **Replace**.

  ➡ Replacing the Maintenance Cartridge

- You can check the model number of a maintenance cartridge if you select **View model no.**.

Overview

- **Safety**
  - Safety Precautions
  - Regulatory Information
  - WEEE
- **Handling Precautions**
  - Canceling Print Jobs
  - Legal Restrictions on Scanning/Copying
  - Printer Handling Precautions
  - Transporting Your Printer
  - When Repairing, Lending, or Disposing of the Printer
  - Keeping Print Quality High
- **Main Components and Their Use**
  - Main Components
  - Power Supply
  - LCD and Operation Panel
  - Entering Numbers, Letters, and Symbols
- **Changing Settings**
  - Changing Printer Settings from Your Computer (Windows)
  - Changing Printer Settings from Your Computer (macOS)
  - Changing Settings from Operation Panel
  - Handling Printer Configuration Using the Web Browser
- **Specifications**

Safety

- Safety Precautions
- Regulatory Information
- WEEE

Safety Precautions

Safety Precautions

- This manual contains important notices and safety precautions about your printer.

  Do not use the printer in ways other than described in the accompanying manuals, as this may result in fire, electric shock or other unexpected accidents.

  Safety standard marks and declarations are only valid for the supported voltages and frequencies in the applicable countries or regions.

⚠ Warning

- Users with cardiac pacemakers:

  This product emits a low-level magnetic flux. If you feel abnormalities, please move away from the product and consult your doctor.

- Do not use the printer in the following cases:

  Stop use immediately, unplug the printer and call your local service representative to request repair.

  - Metal objects or liquids are spilt inside the printer.
  - The printer emits smoke, strange odors, or makes unusual noises.
  - The power cord or plug overheat or are broken, bent or damaged in any way.

- Failure to adhere to the following may result in fire, electric shock, or injury:
  - Do not place product close to the flammable solvents such as alcohol or thinner.
  - Do not open or modify the printer.
  - Use only the power cord/cables that came with your printer. Do not use these cables with other devices.
  - Do not plug in to voltages or frequencies other than those specified.
  - Plug the power cord into the socket completely.
  - Do not plug in or unplug the power cord with wet hands.
  - Do not damage the power cord or other cables by twisting, bundling, tying, pulling or excessively bending them.
  - Do not place heavy objects on the power cord.
  - Do not connect multiple power cords to a single electrical outlet. Do not use multiple extension cords.
  - Do not leave the printer plugged in during lightning storms.
  - Always unplug the power cord and cables when cleaning. Do not use flammable sprays or liquids such as alcohol or thinners for cleaning.
  - Unplug the power cord once a month to check that it is not overheating, rusted, bent, scratched, split, or otherwise damaged.

⚠ Caution

- Do not put your hands inside the printer while printing.
- Do not touch the metal parts of the print head immediately after printing.
- Ink bottles
  - Keep out of reach of children.

- Do not drink ink.
  If ink is accidentally licked or swallowed, rinse out your mouth or drink one or two glasses of water and obtain medical advice immediately.
  If ink gets into your eyes, flush them with water right away, and obtain medical advice immediately.
- If ink gets on your skin, wash the area with soap and water immediately. If irritation to your skin persists, obtain medical advice immediately.
- When you store ink bottles, close bottle caps completely and place bottles in standing position. If the ink bottles are laid down, ink may leak.
- When refilling ink tanks, take sufficient care to prevent ink from spattering onto surroundings.
- Ink may stain clothes or other belongings permanently. Washing may not remove ink stains.
- Do not leave ink bottles in areas exposed to high temperature, such as near fire or a heater or in a car. Bottles may warp and cause ink leakage or ink may become poor quality.
- Do not subject ink bottles to impacts. Ink bottles may be damaged or bottle caps may come off by such impact, and ink may leak.
- Do not transfer ink to other containers. This may result in accidental ingestion, inappropriate use, or poor ink quality.

• Moving the printer
  - Hold the printer by its sides and carry it with both hands.

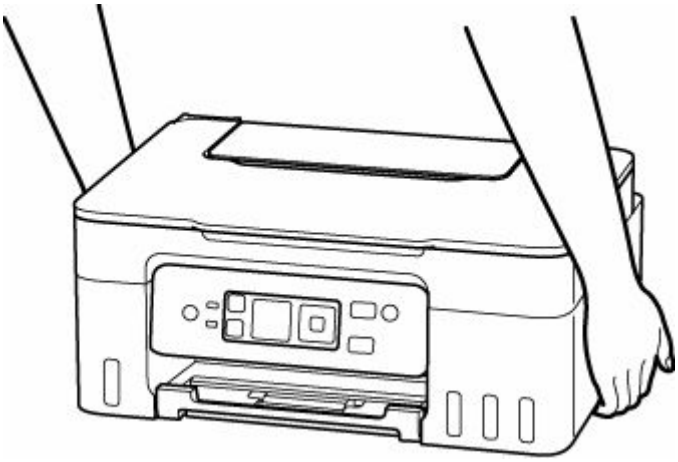

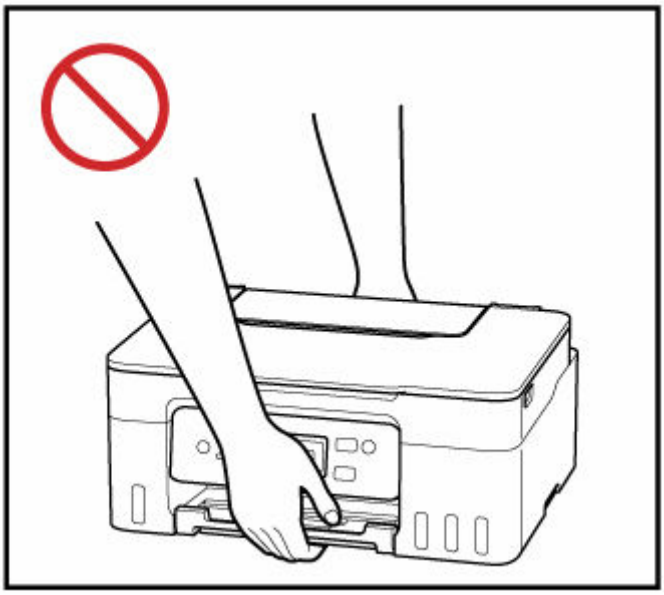

General Notices

Choosing a Location

Refer to "Specifications" in the Online manual for details on operating environment.

- Do not install the printer in a location that is unstable or subject to excessive vibration.
- Do not install the printer in locations that get very hot (direct sunlight, or close to a heating source), very humid or dusty locations, or outdoors.
- Do not place the printer on a thick rug or carpet.
- Do not place the printer flush against a wall.

Power Supply

- Keep the area around the power outlet clear at all times so you can easily unplug the power cord if necessary.
- Never remove the plug by pulling on the cord.

General Notices

- Do not tilt the printer, stand it on end, or turn it upside down. This may cause ink to leak.
- Do not place anything on top of the printer. Be especially careful to avoid metal objects such as paper clips and staples, and containers holding flammable liquids such as alcohol or thinner.
- Be sure to observe the following when loading the original on the platen. Failure to observe the following may cause the scanner to malfunction or the platen glass to break.
  - Do not place any objects weighing 4.4 lb (2.0 kg) or more on the platen glass.
  - Do not put any pressure of 4.4 lb (2.0 kg) or more on the platen glass, such as pressing down the original.
- Modifying or dismantling the print head or ink bottles, such as by putting holes in them, could cause the ink to leak out and cause a malfunction. We recommend that you do not modify or dismantle them.
- Do not put the print head or ink bottles into a fire.

Regulatory Information

Users in the U.S.A.

FCC Notice (U.S.A. Only)
For 120V, 60Hz model
Model Number: K10555 (Contains FCC Approved WLAN Module K30387)

This device complies with Part 15 of the FCC Rules. Operation is subject to the following two conditions: (1) This device may not cause harmful interference, and (2) this device must accept any interference received, including interference that may cause undesired operation.

Note: This equipment has been tested and found to comply with the limits for a Class B digital device, pursuant to Part 15 of the FCC Rules. These limits are designed to provide reasonable protection against harmful interference in a residential installation. This equipment generates, uses and can radiate radio frequency energy and, if not installed and used in accordance with the instructions, may cause harmful interference to radio communications.
However, there is no guarantee that interference will not occur in a particular installation. If this equipment does cause harmful interference to radio or television reception, which can be determined by turning the equipment off and on, the user is encouraged to try to correct the interference by one or more of the following measures:

- Reorient or relocate the receiving antenna.
- Increase the separation between the equipment and receiver.
- Connect the equipment into an outlet on a circuit different from that to which the receiver is connected.
- Consult the dealer or an experienced radio/TV technician for help.

Use of a shielded cable is required to comply with Class B limits in Subpart B of Part 15 of the FCC Rules.

Do not make any changes or modifications to the equipment unless otherwise specified in the manual. If such changes or modifications should be made, you could be required to stop operation of the equipment.

Changes or modifications not expressly approved by the party responsible for compliance could void the user's authority to operate equipment.

This transmitter must not be co-located or operating in conjunction with any other antenna or transmitter.

The equipment complies with FCC radiation exposure limits for at uncontrolled equipment. This equipment should be installed and operated with minimum distance at least 20cm between the radiator and persons body (excluding extremities: hands, wrists, feet and ankles) and must not be colocated or operated with any other antenna or transmitter.

Canon U.S.A., Inc.
One Canon Park
Melville, New York 11747
1-800-652-2666

Users in Europe

Product Information for the requirement of COMMISSION REGULATION (EU)

The power consumption in Off Mode or network standby and the transition time to Off or network standby are as follows:
https://www.canon-europe.com/consumer/lot26/

Interference

Do not use the printer around medical equipment or other electronic devices. Signals from the printer may interfere with the correct operation of these devices.

WEEE

Only for the United Kingdom

This symbol indicates that this product is not to be disposed of with your household waste, according to the UK Waste Electrical and Electronic Equipment Regulations. This product should be handed over to a designated collection point, e.g., on an authorized one-for-one basis when you buy a new similar product or to an authorized collection site for recycling waste electrical and electronic equipment (EEE). Improper handling of this type of waste could have a possible negative impact on the environment and human health due to potentially hazardous substances that are generally associated with EEE. At the same time, your cooperation in the correct disposal of this product will contribute to the effective usage of natural resources. For more information about where you can drop off your waste equipment for recycling, please contact your local city office, waste authority, approved WEEE scheme or your household waste disposal service. For more information regarding return and recycling of WEEE products, please visit www.canon-europe.com/sustainability/approach/.

Only for European Union and EEA (Norway, Iceland and Liechtenstein)

This symbol indicates that this product is not to be disposed of with your household waste, according to the WEEE Directive (2012/19/EU) and national legislation. This product should be handed over to a designated collection point, e.g., on an authorized one-for-one basis when you buy a new similar product or to an authorized collection site for recycling waste electrical and electronic equipment (EEE). Improper handling of this type of waste could have a possible negative impact on the environment and human health due to potentially hazardous substances that are generally associated with EEE. At the same time, your cooperation in the correct disposal of this product will contribute to the effective usage of natural resources. For more information about where you can drop off your waste equipment for recycling, please contact your local city office, waste authority, approved WEEE scheme or your household waste disposal service. For more information regarding return and recycling of WEEE products, please visit www.canon-europe.com/weee.

Nur für Europäische Union und EWR (Norwegen, Island und Liechtenstein)

Dieses Symbol weist darauf hin, dass dieses Produkt gemäß der EU-Richtlinie über Elektro- und Elektronik-Altgeräte (2012/19/EU) und nationalen Gesetzen nicht über den Hausmüll entsorgt werden

darf. Dieses Produkt muss bei einer dafür vorgesehenen Sammelstelle abgegeben werden. Dies kann z. B. durch Rückgabe beim Kauf eines ähnlichen Produkts oder durch Abgabe bei einer autorisierten Sammelstelle für die Wiederaufbereitung von Elektro- und Elektronik-Altgeräten geschehen. Der unsachgemäße Umgang mit Altgeräten kann aufgrund potentiell gefährlicher Stoffe, die generell mit Elektro- und Elektronik-Altgeräten in Verbindung stehen, negative Auswirkungen auf die Umwelt und die menschliche Gesundheit haben. Durch die umweltgerechte Entsorgung dieses Produkts tragen Sie außerdem zu einer effektiven Nutzung natürlicher Ressourcen bei. Informationen zu Sammelstellen für Altgeräte erhalten Sie bei Ihrer Stadtverwaltung, dem öffentlich-rechtlichen Entsorgungsträger, einer autorisierten Stelle für die Entsorgung von Elektro- und Elektronik-Altgeräten oder Ihrem örtlichen Entsorgungsunternehmen. Weitere Informationen zur Rückgabe und Entsorgung von Elektro- und Elektronik-Altgeräten finden Sie unter www.canon-europe.com/weee.

Zusatzinformationen für Deutschland:

Dieses Produkt kann durch Rückgabe an den Händler unter den in der Verordnung des Elektro- und Elektronikgerätegesetzes beschriebenen Bedingungen abgegeben werden.
Als Endbenutzer und Besitzer von Elektro- oder Elektronikgeräten sind Sie verpflichtet:

- diese einer vom unsortierten Siedlungsabfall getrennten Erfassung zuzuführen,
- Altbatterien und Altakkumulatoren, die nicht von Altgerät umschlossen sind, sowie Lampen, die zerstörungsfrei aus dem Altgerät entnommen werden können, vor der Abgabe an einer Erfassungsstelle vom Altgerät zerstörungsfrei zu trennen,
- personenbezogener Daten auf den Altgeräten vor der Entsorgung zu löschen.

Die Bedeutung von dem Symbol der durchgestrichenen Abfalltonne auf Rädern finden Sie oben in dieser Beschreibung.

Die Vertreiber von Elektro- oder Elektronikgeräten haben die Pflicht zur unentgeltlichen Rücknahme von Altgeräten. Die Vertreiber haben die Endnutzer über die von ihnen geschaffenen Möglichkeiten der Rückgabe von Altgeräten zu informieren.

Union Européenne, Norvège, Islande et Liechtenstein uniquement.

Ce symbole indique que ce produit ne doit pas être jeté avec les ordures ménagères, conformément à la directive DEEE (2012/19/UE) et à la réglementation de votre pays. Ce produit doit être confié au distributeur à chaque fois que vous achetez un produit neuf similaire, ou à un point de collecte mis en place par les collectivités locales pour le recyclage des Déchets des Équipements Électriques et Électroniques (DEEE). Le traitement inapproprié de ce type de déchet risque d'avoir des répercussions sur l'environnement et la santé humaine, du fait de la présence de substances potentiellement dangereuses généralement associées aux équipements électriques et électroniques. Parallèlement, votre entière coopération dans le cadre de la mise au rebut correcte de ce produit favorisera une meilleure utilisation des ressources naturelles. Pour plus d'informations sur les points de collecte des équipements à recycler, contactez vos services municipaux, les autorités locales compétentes, le plan DEEE approuvé ou le service d'enlèvement des ordures ménagères. Pour plus d'informations sur le retour et le recyclage des produits DEEE, consultez le site: www.canon-europe.com/weee.

Uitsluitend bestemd voor de Europese Unie en EER (Noorwegen, IJsland en Liechtenstein)

Dit symbool geeft aan dat dit product in overeenstemming met de AEEA-richtlijn (2012/19/EU) en de nationale wetgeving niet mag worden afgevoerd met het huishoudelijk afval. Dit product moet worden ingeleverd bij een aangewezen, geautoriseerd inzamelpunt, bijvoorbeeld wanneer u een nieuw gelijksoortig product aanschaft, of bij een geautoriseerd inzamelpunt voor hergebruik van elektrische en elektronische apparatuur (EEA). Een onjuiste afvoer van dit type afval kan leiden tot negatieve effecten op het milieu en de volksgezondheid als gevolg van potentieel gevaarlijke stoffen die veel voorkomen in elektrische en elektronische apparatuur (EEA). Bovendien werkt u door een juiste afvoer van dit product mee aan het effectieve gebruik van natuurlijke hulpbronnen. Voor meer informatie over waar u uw afgedankte apparatuur kunt inleveren voor recycling kunt u contact opnemen met het gemeentehuis in uw woonplaats, de reinigingsdienst, of het afvalverwerkingsbedrijf. U kunt ook het schema voor de afvoer van afgedankte elektrische en elektronische apparatuur (AEEA) raadplegen. Ga voor meer informatie over het inzamelen en recyclen van afgedankte elektrische en elektronische apparatuur naar www.canon-europe.com/weee.

Sólo para la Unión Europea y el Área Económica Europea (Noruega, Islandia y Liechtenstein)

Este símbolo indica que este producto no debe desecharse con los desperdicios domésticos, de acuerdo con la directiva RAEE (2012/19/UE) y con la legislación nacional. Este producto debe entregarse en uno de los puntos de recogida designados, como por ejemplo, entregándolo en el lugar de venta al comprar un producto similar o depositándolo en un lugar de recogida autorizado para el reciclado de residuos de aparatos eléctricos y electrónicos (RAEE). La manipulación inapropiada de este tipo de desechos podría tener un impacto negativo en el entorno y la salud humana, debido a las sustancias potencialmente peligrosas que normalmente están asociadas con los RAEE. Al mismo tiempo, su cooperación a la hora de desechar correctamente este producto contribuirá a la utilización eficazde los recursos naturales. Para más información sobre cómo puede eliminar el equipo para su reciclado, póngase en contacto con las autoridades locales, con las autoridades encargadas de los desechos, con un sistema de gestión RAEE autorizado o con el servicio de recogida de basuras doméstico. Si desea más información acerca de la devolución y reciclado de RAEE, visite la web www.canon-europe.com/weee.

Només per a la Unió Europea i a l'Espai Econòmic Europeu (Noruega, Islàndia i Liechtenstein)

Aquest símbol indica que aquest producte no s'ha de llençar a les escombraries de la llar, d'acord amb la Directiva RAEE (2012/19/UE) i la legislació nacional. Aquest producte s'hauria de lliurar en un dels punts de recollida designats, com per exemple, intercanviant-lo un per un en comprar un producte similar o lliurant-lo en un lloc de recollida autoritzat per al reciclatge de residus d'aparells elèctrics i electrònics (AEE). La manipulació inadequada d'aquest tipus de residus podria tenir un impacte negatiu en l'entorn i en la salut humana, a causa de les substàncies potencialment perilloses que normalment estan associades als AEE. Així mateix, la vostra cooperació a l'hora de llençar correctament aquest producte contribuirà a la utilització efectiva dels recursos naturals. Per a més informació sobre els punts on podeu lliurar aquest producte per procedir al seu reciclatge, adreceu-vos a la vostra oficina municipal, a les autoritats encarregades dels residus, al pla de residus homologat per la RAEE o al servei de recollida de deixalles domèstiques de la vostra localitat. Per a més informació sobre la devolució i el reciclatge de productes RAEE, visiteu www.canon-europe.com/weee.

Solo per Unione Europea e SEE (Norvegia, Islanda e Liechtenstein)

Questo simbolo indica che il prodotto deve essere oggetto di raccolta separata in conformità alla Direttiva RAEE (2012/19/UE) e alla normativa locale vigente. Il prodotto deve essere smaltito presso un centro di raccolta differenziata, un distributore autorizzato che applichi il principio dell'"uno contro uno", ovvero del ritiro della vecchia apparecchiatura elettrica al momento dell'acquisto di una nuova, o un impianto autorizzato al riciclaggio dei rifiuti di apparecchiature elettriche ed elettroniche. La gestione impropria di questo tipo di rifiuti può avere un impatto negativo sull'ambiente e sulla salute umana causato dalle sostanze potenzialmente pericolose che potrebbero essere contenute nelle apparecchiature elettriche ed elettroniche. Un corretto smaltimento di tali prodotti contribuirà inoltre a un uso efficace delle risorse naturali ed eviterà di incorrere nelle sanzioni amministrative di cui all'art. 255 e successivi del Decreto Legislativo n. 152/06. Per ulteriori informazioni sullo smaltimento e il recupero dei Rifiuti di Apparecchiature Elettriche ed Elettroniche, consultare la Direttiva RAEE, rivolgersi alle autorità competenti, oppure visitare il sito www.canon-europe.com/weee.

Apenas para a União Europeia e AEE (Noruega, Islândia e Liechtenstein)

Este símbolo indica que o produto não deve ser colocado no lixo doméstico, de acordo com a Directiva REEE (2012/19/UE) e a legislação nacional. Este produto deverá ser colocado num ponto de recolha designado, por exemplo, num local próprio autorizado quando adquirir um produto semelhante novo ou num local de recolha autorizado para reciclar resíduos de equipamentos eléctricos e electrónicos (EEE). O tratamento inadequado deste tipo de resíduo poderá causar um impacto negativo no ambiente e na saúde humana devido às substâncias potencialmente perigosas normalmente associadas aos equipamentos eléctricos e electrónicos. Simultaneamente, a sua cooperação no tratamento correcto deste produto contribuirá para a utilização eficaz dos recursos naturais. Para mais informações sobre os

locais onde o equipamento poderá ser reciclado, contacte os serviços locais, a autoridade responsável pelos resíduos, o esquema REEE aprovado ou o serviço de tratamento de lixo doméstico. Para mais informações sobre a devolução e reciclagem de produtos REEE, vá a www.canon-europe.com/weee.

Gælder kun i Europæiske Union og EØS (Norge, Island og Liechtenstein)

Dette symbol angiver, at det pågældende produkt ikke må bortskaffes sammen med dagrenovation jf. direktivet om affald af elektrisk og elektronisk udstyr (WEEE) (2012/19/EU) og gældende national lovgivning. Det pågældende produkt skal afleveres på et nærmere specificeret indsamlingssted, f.eks. i overensstemmelse med en godkendt én-til-én-procedure, når du indkøber et nyt tilsvarende produkt, eller produktet skal afleveres på et godkendt indsamlingssted for elektronikaffald. Forkert håndtering af denne type affald kan medføre negative konsekvenser for miljøet og menneskers helbred på grund af de potentielt sundhedsskadelige stoffer, der generelt kan forefindes i elektrisk og elektronisk udstyr. Når du foretager korrekt bortskaffelse af det pågældende produkt, bidrager du til effektiv brug af naturressourcerne. Yderligere oplysninger om, hvor du kan bortskaffe dit elektronikaffald med henblik på genanvendelse, får du hos de kommunale renovationsmyndigheder. Yderligere oplysninger om returnering og genanvendelse af affald af elektrisk og elektronisk udstyr får du ved at besøge www.canon-europe.com/weee.

Μόνο για την Ευρωπαϊκή Ένωση και τον ΕΟΧ (Νορβηγία, Ισλανδία και Λιχτενστάιν)

Αυτό το σύμβολο υποδηλώνει ότι αυτό το προϊόν δεν πρέπει να απορρίπτεται μαζί με τα οικιακά απορρίμματα, σύμφωνα με την Οδηγία σχετικά με τα Απόβλητα Ηλεκτρικού και Ηλεκτρονικού Εξοπλισμού (ΑΗΗΕ) (2012/19/ΕΕ) και την εθνική σας νομοθεσία. Αυτό το προϊόν πρέπει να παραδίδεται σε καθορισμένο σημείο συλλογής, π.χ. σε μια εξουσιοδοτημένη βάση ανταλλαγής όταν αγοράζετε ένα νέο παρόμοιο προϊόν ή σε μια εξουσιοδοτημένη θέση συλλογής για την ανακύκλωση των αποβλήτων Ηλεκτρικού και Ηλεκτρονικού Εξοπλισμού (ΗΗΕ). Ο ακατάλληλος χειρισμός αυτού του τύπου αποβλήτων μπορεί να έχει αρνητικό αντίκτυπο στο περιβάλλον και την υγεία του ανθρώπου, λόγω δυνητικώς επικίνδυνων ουσιών που γενικά συνδέονται με τον ΗΗΕ. Ταυτόχρονα, η συνεργασία σας όσον αφορά τη σωστή απόρριψη αυτού του προϊόντος θα συμβάλει στην αποτελεσματική χρήση των φυσικών πόρων. Για περισσότερες πληροφορίες σχετικά με τα σημεία όπου μπορείτε να απορρίψετε τον εξοπλισμό σας για ανακύκλωση, επικοινωνήστε με το τοπικό γραφείο της πόλης σας, την υπηρεσία απορριμμάτων, το εγκεκριμένο σχήμα ΑΗΗΕ ή την υπηρεσία απόρριψης οικιακών αποβλήτων. Για περισσότερες πληροφορίες σχετικά με την επιστροφή και την ανακύκλωση των προϊόντων ΑΗΗΕ, επισκεφθείτε την τοποθεσία www.canon-europe.com/weee.

Gjelder kun den europeiske union og EØS (Norge, Island og Liechtenstein)

Dette symbolet indikerer at dette produktet ikke skal kastes sammen med husholdningsavfall, i henhold til WEEE-direktiv (2012/19/EU) og nasjonal lov. Produktet må leveres til et dertil egnet innsamlingspunkt, det vil si på en autorisert en-til-en-basis når du kjøper et nytt lignende produkt, eller til et autorisert innsamlingssted for resirkulering av avfall fra elektrisk og elektronisk utstyr (EE-utstyr). Feil håndtering av denne typen avfall kan være miljø- og helseskadelig på grunn av potensielt skadelige stoffer som ofte brukes i EE-utstyr. Samtidig bidrar din innsats for korrekt avhending av produktet til effektiv bruk av naturressurser. Du kan få mer informasjon om hvor du kan avhende utrangert utstyr til resirkulering ved å kontakte lokale myndigheter, et godkjent WEEE-program eller husholdningens renovasjonsselskap. Du finner mer informasjon om retur og resirkulering av WEEE-produkter på www.canon-europe.com/weee.

Vain Euroopan unionin sekä ETA:n (Norja, Islanti ja Liechtenstein) alueelle.

Tämä tunnus osoittaa, että sähkö- ja elektroniikkalaiteromua koskeva direktiivi (SER-direktiivi, 2012/19/EU) sekä kansallinen lainsäädäntö kieltävät tuotteen hävittämisen talousjätteen mukana. Tuote on vietävä asianmukaiseen keräyspisteeseen, esimerkiksi kodinkoneliikkeeseen uutta vastaavaa tuotetta ostettaessa tai viralliseen sähkö- ja elektroniikkalaiteromun keräyspisteeseen. Sähkö- ja elektroniikkalaiteromun virheellinen käsittely voi vahingoittaa ympäristöä ja ihmisten terveyttä, koska laitteet saattavat sisältää ympäristölle ja terveydelle haitallisia aineita. Lisäksi tuotteen asianmukainen hävittäminen säästää luonnonvaroja. Lisätietoja sähkö- ja elektroniikkalaiteromun keräyspisteistä saat kaupunkien ja kuntien tiedotuksesta, jätehuoltoviranomaisilta, sähkö- ja elektroniikkalaiteromun kierrätysjärjestelmän ylläpitäjältä ja jätehuoltoyhtiöltä. Lisätietoja sähkö- ja elektroniikkalaiteromun keräyksestä ja kierrätyksestä on osoitteessa www.canon-europe.com/weee.

Endast för Europeiska unionen och EES (Norge, Island och Liechtenstein)

Den här symbolen visar att produkten enligt WEEE-direktivet (2012/19/EU) och nationell lagstiftning inte får sorteras och slängas som hushållsavfall. Den här produkten ska lämnas in på en därför avsedd insamlingsplats, t.ex. på en återvinningsstation auktoriserad att hantera elektrisk och elektronisk utrustning (EE-utrustning) eller hos handlare som är auktoriserade att byta in varor då nya, motsvarande köps (en mot en). Olämplig hantering av avfall av den här typen kan ha en negativ inverkan på miljön och

människors hälsa på grund av de potentiellt farliga ämnen som kan återfinnas i elektrisk och elektronisk utrustning. Din medverkan till en korrekt avfallshantering av den här produkten bidrar dessutom till en effektiv användning av naturresurserna. Kontakta ditt lokala kommunkontor, berörd myndighet, företag för avfallshantering eller ta del av en godkänd WEEE-organisation om du vill ha mer information om var du kan lämna den kasserade produkten för återvinning. För mer information om inlämning och återvinning av WEEE-produkter, se www.canon-europe.com/weee.

Pouze Evropská unie a EHP (Norsko, Island a Lichtenštejnsko)

Tento symbol znamená, že podle směrnice o OEEZ (2012/19/EU) a podle vnitrostátních právních předpisů nemá být tento výrobek likvidován s odpadem z domácností. Tento výrobek má být vrácen do sběrného místa, např. v rámci autorizovaného systému odběru jednoho výrobku za jeden nově prodaný podobný výrobek nebo v autorizovaném sběrném místě pro recyklaci odpadních elektrických a elektronických zařízení (OEEZ). Nevhodné nakládání s tímto druhem odpadu by mohlo mít negativní dopad na životní prostředí a lidské zdraví, protože elektrická a elektronická zařízení zpravidla obsahují potenciálně nebezpečné látky. Vaše spolupráce na správné likvidaci tohoto výrobku současně napomůže efektivnímu využívání přírodních zdrojů. Další informace o místech sběru vašeho odpadního zařízení k recyklaci vám sdělí místní úřad vaší obce, správní orgán vykonávající dozor nad likvidací odpadu, sběrny OEEZ nebo služba pro odvoz komunálního odpadu. Další informace týkající se vracení a recyklace OEEZ naleznete na adrese www.canon-europe.com/weee.

Csak az Európai Unió és az EGT (Norvégia, Izland és Liechtenstein) országaiban

Ez a szimbólum azt jelzi, hogy a helyi törvények és a WEEE-irányelv (2012/19/EU) szerint a termék nem kezelhető háztartási hulladékként. A terméket a kijelölt nyilvános gyűjtőpontokon kell leadni, például hasonló cserekészülék vásárlásakor, illetve bármelyik, elektromos és elektronikai berendezésekből származó hulladék (WEEE) átvételére feljogosított gyűjtőponton. Az ilyen jellegű hulladékok a nem megfelelő kezelés esetén a bennük található veszélyes anyagok révén ártalmasak lehetnek a környezetre és az emberek egészségére. Továbbá, a termékből származó hulladék megfelelő kezelésével hozzájárulhat a természetes nyersanyagok hatékonyabb hasznosításához. A berendezésekből származó, újrahasznosítható hulladékok elhelyezésére vonatkozó további tudnivalókért forduljon a helyi önkormányzathoz, a közterület-fenntartó vállalathoz, a háztartási hulladék begyűjtését végző vállalathoz, illetve a hivatalos WEEE-képviselethez. További tudnivalókat a WEEE-termékek visszajuttatásáról és újrahasznosításáról a www.canon-europe.com/weee.

Tylko dla krajów Unii Europejskiej oraz EOG (Norwegia, Islandia i Liechtenstein)

Ten symbol oznacza, że zgodnie z dyrektywą WEEE dotyczącą zużytego sprzętu elektrycznego i elektronicznego (2012/19/UE) oraz przepisami lokalnymi nie należy wyrzucać tego produktu razem z odpadami gospodarstwa domowego. Produkt należy przekazać do wyznaczonego punktu gromadzenia odpadów, np. firmie, od której kupowany jest nowy, podobny produkt lub do autoryzowanego punktu gromadzenia zużytego sprzętu elektrycznego i elektronicznego w celu poddania go recyklingowi. Usuwanie tego typu odpadów w nieodpowiedni sposób może mieć negatywny wpływ na otoczenie i zdrowie innych osób ze względu na niebezpieczne substancje stosowane w takim sprzęcie. Jednocześnie pozbycie się zużytego sprzętu w zalecany sposób przyczynia się do właściwego wykorzystania zasobów naturalnych. Aby uzyskać więcej informacji na temat punktów, do których można dostarczyć sprzęt do recyklingu, prosimy skontaktować się z lokalnym urzędem miasta, zakładem utylizacji odpadów, skorzystać z instrukcji zatwierdzonej dyrektywą WEEE lub skontaktować się z przedsiębiorstwem zajmującym się wywozem odpadów domowych. Więcej informacji o zwracaniu i recyklingu zużytego sprzętu elektrycznego i elektronicznego znajduje się w witrynie www.canon-europe.com/weee.

Platí len pre štáty Európskej únie a EHP (Nórsko, Island a Lichtenštajnsko)

Tento symbol znamená, že podľa Smernice 2012/19/EÚ o odpade z elektrických a elektronických zariadení (OEEZ) a podľa platnej legislatívy Slovenskej republiky sa tento produkt nesmie likvidovať spolu s komunálnym odpadom. Produkt je potrebné odovzdať do určenej zberne, napr. prostredníctvom výmeny za kúpu nového podobného produktu, alebo na autorizované zberné miesto, ktoré spracúva odpad z elektrických a elektronických zariadení (EEZ). Nesprávna manipulácia s takýmto typom odpadu môže mať negatívny vplyv na životné prostredie a ľudské zdravie, pretože elektrické a elektronické zariadenia obsahujú potenciálne nebezpečné látky. Spoluprácou na správnej likvidácii produktu prispejete k účinnému využívaniu prírodných zdrojov. Ďalšie informácie o mieste recyklácie opotrebovaných zariadení získate od miestneho úradu, úradu životného prostredia, zo schváleného plánu OEEZ alebo od spoločnosti, ktorá zaisťuje likvidáciu komunálneho odpadu. Viac informácií nájdete aj na webovej stránke: www.canon-europe.com/weee.

Üksnes Euroopa Liit ja EMP (Norra, Island ja Liechtenstein)

See sümbol näitab, et antud toodet ei tohi vastavalt elektri- ja elektroonikaseadmete jäätmeid käsitlevale direktiivile (2012/19/EL) ning teie riigis kehtivatele õigusaktidele utiliseerida koos olmejäätmetega. Antud

toode tuleb anda selleks määratud kogumispunkti, nt müügipunkt, mis on volitatud üks ühe vastu vahetama, kui ostate uue sarnase toote, või elektri- ja elektroonikaseadmete jäätmete ümbertöötlemiseks mõeldud kogumispunkti. Täiendava teabe saamiseks elektri- ja elektroonikaseadmetest tekkinud jäätmete tagastamise ja ümbertöötlemise kohta võtke ühendust kohaliku omavalitsusega, asjakohase valitsusasutusega, asjakohase tootjavastutusorganisatsiooniga või olmejäätmete käitlejaga. Lisateavet leitate ka Interneti-leheküljelt www.canon-europe.com/weee.

Tikai Eiropas Savienībai un EEZ (Norvēģijai, Islandei un Lihtenšteinai)

Šis simbols norāda, ka atbilstoši ES Direktīvai (2012/19/ES) par elektrisko un elektronisko iekārtu atkritumiem (EEIA) un vietējiem tiesību aktiem no šī izstrādājuma nedrīkst atbrīvoties, izmetot to kopā ar sadzīves atkritumiem. Šis izstrādājums ir jānodod piemērotā savākšanas vietā, piemēram, apstiprinātā veikalā, kur iegādājaties līdzīgu jaunu produktu un atstājat veco, vai apstiprinātā vietā izlietotu elektrisko un elektronisko iekārtu pārstrādei. Nepareiza šāda veida atkritumu apsaimniekošana var apdraudēt vidi un cilvēka veselību tādu iespējami bīstamu vielu dēļ, kas parasti ir elektriskajās un elektroniskajās iekārtās. Turklāt jūsu atbalsts pareizā šāda veida atkritumu apsaimniekošanā sekmēs efektīvu dabas resursu izmantošanu. Lai saņemtu pilnīgāku informāciju par vietām, kur izlietoto iekārtu var nodot pārstrādei, sazinieties ar vietējo pašvaldību, atkritumu savākšanas atbildīgo dienestu, pilnvarotu EEIA struktūru vai sadzīves atkritumu apsaimniekošanas iestādi. Lai saņemtu plašāku informāciju par elektrisko un elektronisko iekārtu nodošanu pārstrādei, apmeklējiet tīmekļa vietni www.canon-europe.com/weee.

Tik Europos Sąjungai ir EEE (Norvegijai, Islandijai ir Lichtenšteinui)

Šis ženklas reiškia, kad gaminio negalima išmesti su buitinėmis atliekomis, kaip yra nustatyta Direktyvoje (2012/19/ES) ir nacionaliniuose teisė aktuose dėl EĮ atliekų tvarkymo. Šį gaminį reikia atiduoti į tam skirtą surinkimo punktą, pvz., pagal patvirtintą keitimo sistemą, kai perkamas panašus gaminys, arba į elektros ir elektroninės įrangos (EĮ) atliekų perdirbimo punktą. Netinkamas tokios rūšies atliekų tvarkymas dėl elektros ir elektroninėje įrangoje esančių pavojingų medžiagų gali pakenkti aplinkai ir žmonių sveikatai. Padėdami užtikrinti tinkamą šio gaminio šalinimo tvarką, kartu prisidėsite prie veiksmingo gamtos išteklių naudojimo. Jei reikia daugiau informacijos, kaip šalinti tokias atliekas, kad jos būtų toliau perdirbamos, kreipkitės į savo miesto valdžios institucijas, atliekų tvarkymo organizacijas, patvirtintų EĮ atliekų sistemų arba jūsų buitinių atliekų tvarkymo įstaigų atstovus. Išsamesnės informacijos apie EĮ atliekų grąžinimo ir perdirbimo tvarką galite rasti apsilankę tinklalapyje www.canon-europe.com/weee.

Samo za Evropsko unijo in EGP (Norveška, Islandija in Lihtenštajn)

Ta simbol pomeni, da tega izdelka v skladu z direktivo OEEO (2012/19/EU) in državno zakonodajo ne smete odvreči v gospodinjske odpadke. Ta izdelek morate odložiti na ustrezno zbiralno mesto, na primer pri pooblaščenem prodajalcu, ko kupite podoben nov izdelek ali na zbiralno mesto za recikliranje električne in elektronske opreme. Neprimerno ravnanje s takšnimi odpadki lahko negativno vpliva na okolje in človekovo zdravje zaradi nevarnih snovi, ki so povezane z električno in elektronsko opremo. S pravilno odstranitvijo izdelka hkrati prispevate tudi k učinkoviti porabi naravnih virov. Če želite več informacij o tem, kje lahko odložite odpadno opremo za recikliranje, pokličite občinski urad, komunalno podjetje ali službo, ki skrbi za odstranjevanje odpadkov, ali si oglejte načrt OEEO. Če želite več informacij o vračanju in recikliranju izdelkov v skladu z direktivo OEEO, obiščite www.canon-europe.com/weee.

Само за Европейския съюз и ЕИП (Норвегия, Исландия и Лихтенщайн)

Този символ показва, че този продукт не трябва да се изхвърля заедно с битовите отпадъци, съгласно Директивата за ИУЕЕО (2012/19/ЕС) и Вашето национално законодателство. Този продукт трябва да бъде предаден в предназначен за целта пункт за събиране, например на база размяна, когато купувате нов подобен продукт, или в одобрен събирателен пункт за рециклиране на излязло от употреба електрическо и електронно оборудване (ИУЕЕО). Неправилното третиране на този тип отпадъци може да доведе до евентуални отрицателни последствия за околната среда и човешкото здраве поради потенциално опасните вещества, които обикновено са свързани с ЕЕО. В същото време Вашето съдействие за правилното изхвърляне на този продукт ще допринесе за ефективното използване на природните ресурси. Повече информация относно местата, където може да предавате излязло от употреба оборудване за рециклиране, може да получите от местните власти, от органа, отговорен за отпадъците и от одобрена система за излязло от употреба ЕЕО или от Вашата местна служба за битови отпадъци. За повече информация относно връщането и рециклирането на продукти от излязло от употреба ЕЕО посетете www.canon-europe.com/weee.

Doar pentru Uniunea Europeană şi EEA (Norvegia, Islanda şi Liechtenstein)

Acest simbol indică faptul că acest produs nu trebuie aruncat o dată cu reziduurile menajere, în conformitate cu Directiva DEEE (Directiva privind deşeurile de echipamente electrice şi electronice) (2012/19/UE) şi legile naţionale. Acest produs trebuie transportat la un punct de colectare special, de

exemplu un centru care preia produsele vechi atunci când achiziţionaţi un produs nou similar, sau la un punct de colectare autorizat pentru reciclarea deşeurilor provenite de la echipamentele electrice şi electronice (EEE). Mânuirea necorespunzătoare a acestor tipuri de deşeuri poate avea un impact negativ asupra mediului înconjurător şi sănătăţii indivizilor, din cauza substanţelor potenţial nocive care sunt în general asociate cu EEE. În acelaşi timp, cooperarea dvs. la reciclarea corectă a acestui produs va contribui la utilizarea efectivă a resurselor naturale. Pentru mai multe informaţii privind locurile de reciclare a deşeurilor provenite de la echipamente, contactaţi biroul primăriei locale, autoritatea responsabilă cu colectarea deşeurilor, schema DEEE aprobată sau serviciul de colectare a deşeurilor menajere. Pentru mai multe informaţii privind returnarea şi reciclarea produselor DEEE, vizitaţi www.canon-europe.com/weee.

Samo za Europsku uniju i EEZ (Norveška, Island i Lihtenštajn)

Ovaj simbol pokazuje da se ovaj proizvod ne smije odlagati s kućnim otpadom sukladno WEEE Direktivi (2012/19/EC) i vašem nacionalnom zakonu. Ovaj proizvod je potrebno predati na posebno mjesto za sakupljanje otpada, npr. na ovlašteno mjesto gdje možete zamijeniti staro za novo ukoliko kupujete novi sličan proizvod ili na ovlašteno mjesto za sakupljanje rabljene električne i elektroničke opreme (EEE) za recikliranje. Nepropisno rukovanje ovom vrstom otpada može imati negativan učinak na okolinu i zdravlje ljudi zbog supstanci koje su potencijalno opasne za zdravlje, a općenito se povezuju s EEE. Istovremeno, vaša će suradnja kroz propisno odlaganje ovog proizvoda doprinijeti efektivnoj uporabi prirodnih resursa. Za više informacija o tome gdje možete odložiti svoj otpad za recikliranje obratite se vašem lokalnom gradskom uredu, komunalnoj službi, odobrenom WEEE programu ili službi za odlaganje kućnog otpada. Ostale informacije o vraćanju i recikliranju WEEE proizvoda potražite na www.canon-europe.com/weee.

Korisnici u Srbiji

Ovaj simbol označava da ovaj proizvod ne sme da se odlaže sa ostalim kućnim otpadom, u skladu sa WEEE Direktivom (2012/19/EU) i nacionalnim zakonima. Ovaj proizvod treba predati određenom centru za prikupljanje, npr. na osnovi "jedan-za-jedan" kada kupujete sličan novi proizvod, ili ovlašćenom centru za prikupljanje za reciklažu istrošene električne i elektronske opreme (EEE). Nepravilno rukovanje ovom vrstom otpada može da ima moguće negativne posledice po životnu sredinu i ljudsko zdravlje usled potencijalno opasnih materijala koji se uglavnom vezuju za EEE. U isto vreme, vaša saradnja na ispravnom odlaganju ovog proizvoda će doprineti efikasnom korišćenju prirodnih resursa. Za više informacija o tome gde možete da predate vašu staru opremu radi recikliranje, vas molimo, da kontaktirate lokalne gradske vlasti, komunalne službe, odobreni plan reciklaže ili Gradsku čistoću. Za više informacija o vraćanju i recikliranju WEEE proizvoda, posetite stranicu www.canon-europe.com/weee.

Handling Precautions

- Canceling Print Jobs
- Legal Restrictions on Scanning/Copying
- Printer Handling Precautions
- Transporting Your Printer
- When Repairing, Lending, or Disposing of the Printer
- Keeping Print Quality High

Legal Restrictions on Scanning/Copying

Scanning, printing, copying, or modifying copies of the following may be punishable under law.

This list is non-exhaustive. When in doubt, check with a local legal representative.

- Paper money
- Money orders
- Certificates of deposit
- Postage stamps (canceled or uncanceled)
- Identification badges or insignia
- Selective service or draft papers
- Checks or drafts issued by governmental agencies
- Motor vehicle licenses and certificates of title
- Traveler's checks
- Food stamps
- Passports
- Immigration papers
- Internal revenue stamps (canceled or uncanceled)
- Bonds or other certificates of indebtedness
- Stock certificates
- Copyrighted works or works of art, without the owner's consent

Printer Handling Precautions

Do not place any object on the document cover!

Do not place any object on the document cover. It will fall into the rear tray when the document cover is opened and cause the printer to malfunction. Also, place the printer where objects will not fall on it.

Transporting Your Printer

When relocating the printer for changing your living place, make sure of the following.

Important

- You cannot take ink out of ink tanks.
- Check if the tank cap is completely inserted.
- Prepare for transporting the printer with the print head attached. This allows the printer to automatically cap the print head, thus preventing it from drying.
- Do not remove the print head. Ink may leak.
- If ink stains the inside of the printer, wipe them using a soft cloth dampened with water.
- When transporting the printer, pack the printer in a plastic bag so that ink does not leak.
- Pack the printer in a sturdy box so that it is placed with its bottom facing down, using sufficient protective material to ensure safe transport.
- Do not tilt the printer. Ink may leak.
- When a shipping agent is handling transport of the printer, have its box marked "THIS SIDE UP" to keep the printer with its bottom facing down. Mark also with "FRAGILE" or "HANDLE WITH CARE".

- Please handle with care and ensure the box remains flat and NOT turned upside down or on its side, as the printer may be damaged and ink in the printer may leak.

1. Select **Maintenance** on the HOME screen.

   ➡ LCD and Operation Panel

2. Select **Transport mode**.

3. Confirm the message, then select **Yes**.

   The mode is shifted to the transfer mode.

   When it is completed, the power is turned off automatically.

4. Check that **ON** lamp is off and unplug power cord.

Important

- Do not unplug the printer while the **ON** lamp is lit or flashing, as it may cause malfunction or damage to the printer, making the printer unable to print.

5. Retract paper output tray.

6. Close paper support.

7. Unplug the printer cable from the computer and from the printer, then unplug the power cord from the printer.

8. Use adhesive tape to secure all the covers on the printer to keep them from opening during transportation. Then pack the printer in the plastic bag.

   Close and seal the opening of the bag with an object such as tape so as not to leak ink.

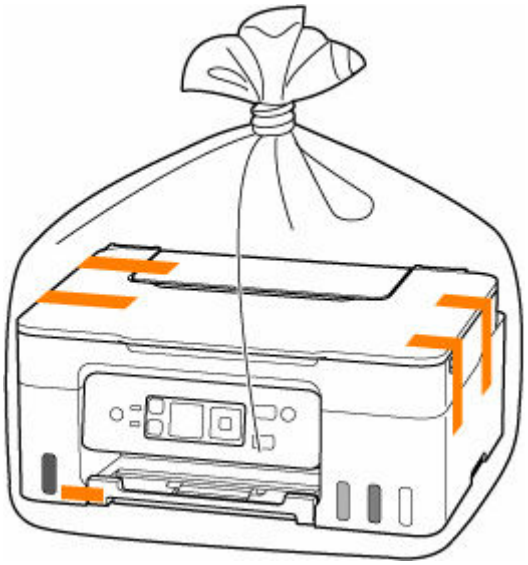

9. Attach the protective material to the printer when packing the printer in the box.

When Repairing, Lending, or Disposing of the Printer

If you have entered personal data, passwords and/or other security settings on the printer, such information may be stored in the printer.

To keep your personal information safe, please be sure to reset all printer settings when sending the printer for repair, lending or transferring the printer to another person, or disposing of the printer.

➡ Reset settings

Keeping Print Quality High

The key to printing with the optimal printing quality is to prevent the print head from drying or clogging. Always observe the following rules for optimal printing quality.

Note

- Depending on the type of paper, ink may blur if you trace the printed area with a highlight pen or paint-stick, or bleed if water or sweat comes in contact with the printed area.

Never unplug the power cord until the power is turned off!

If you press the **ON** button to turn off the power, the printer caps the print head (nozzles) automatically to prevent from drying. If you unplug the power cord from the wall outlet before the **ON** lamp is turned off, the print head will not be capped properly and this will cause drying or clogging.

When unplugging the power cord, check that the **ON** lamp is not lit.

Print periodically!

Just as the tip of a felt pen becomes dry and unusable if it has not been used for a long time, even if it is capped, the print head too, may become dried or clogged if the printer has not been used for a long time. We recommend you to use the printer at least once a month.

Main Components and Their Use

- Main Components
- Power Supply
- LCD and Operation Panel
- Entering Numbers, Letters, and Symbols

Main Components

- Front View
- Rear View
- Inside View
- Operation Panel

Front View

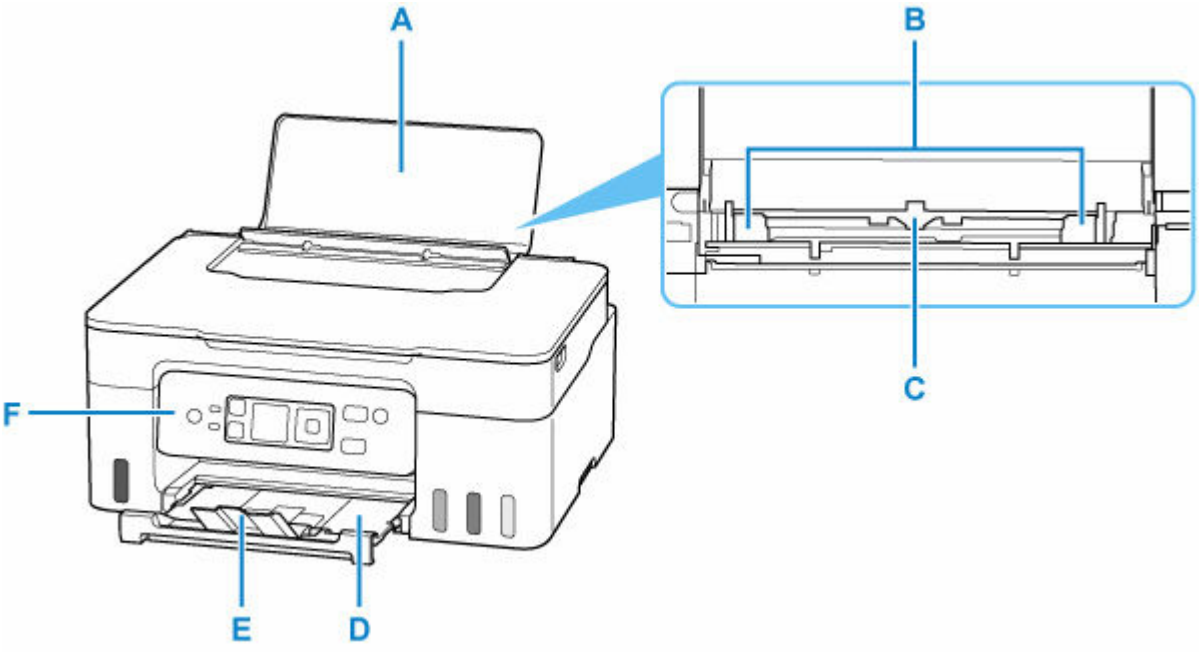

A: Paper Support

Open to load paper in the rear tray.

B: Paper Guides

Align with both sides of the paper stack.

C: Rear Tray

Two or more sheets of the same size and type of paper can be loaded at the same time, and fed automatically one sheet at a time.

➡ Loading Photo Paper / Plain Paper
➡ Loading Envelopes

D: Paper Output Tray

Printed paper is ejected. Pull out it before printing.

E: Output Tray Extension

Open to support ejected paper.

F: Operation Panel

Use to change the settings of the printer or to operate it.

➡ Operation Panel

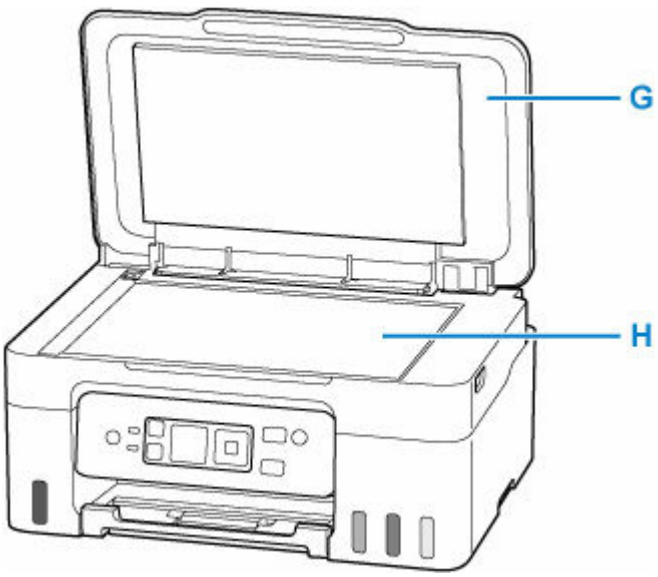

G: Document Cover

Open to load an original on the platen.

H: Platen

Load an original here.

Rear View

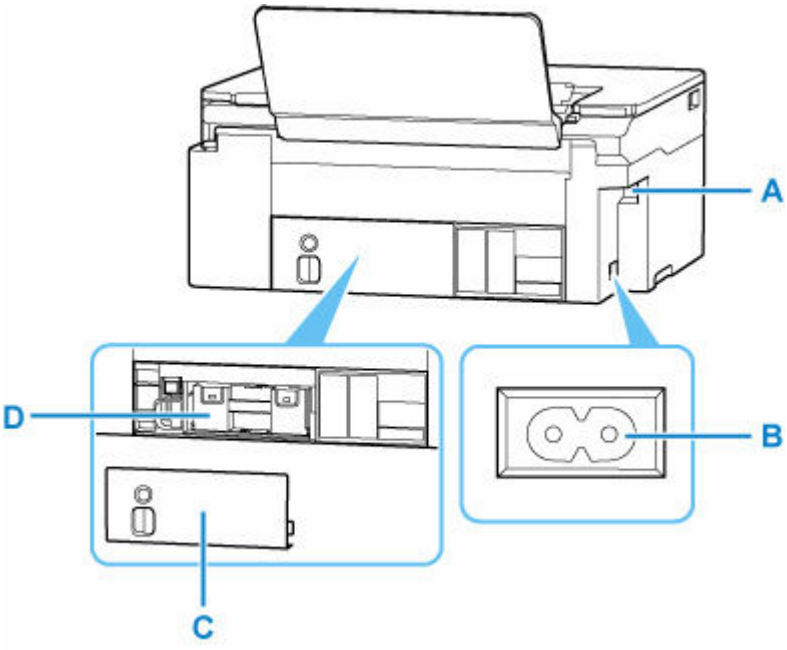

A: USB Port

Plug in the USB cable to connect the printer with a computer.

B: Power Cord Connector

Plug in the supplied power cord.

C: Maintenance Cover

Remove when replacing the maintenance cartridge.

D: Maintenance Cartridge

Absorbs ink used for cleaning.

➡ Replacing the Maintenance Cartridge

Important

- Do not touch the metal casing.
- Do not plug in or unplug the USB cable while the printer is printing or scanning with the computer. This can cause trouble.

Inside View

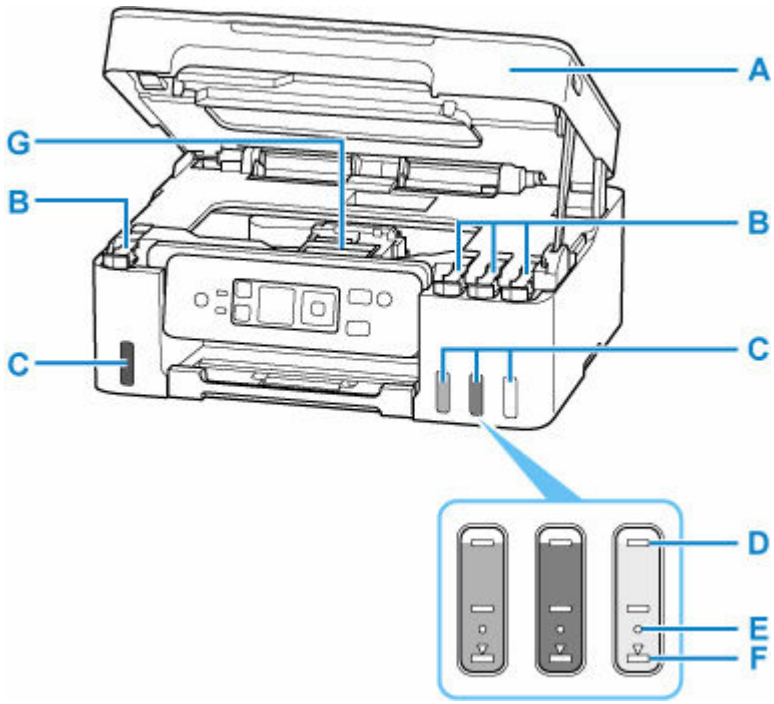

A: Scanning Unit / Cover

Scans originals. Open to refill ink tanks and to remove jammed paper.

B: Tank Caps

Open to refill ink tanks.

C: Ink Tanks

The black ink tank is on the left, and the color ink tanks (cyan, magenta, and yellow) are on the right.

If any ink levels are low, refill the low tanks.

➡ Refilling Ink Tanks

D: Upper Limit Line

Indicates the maximum capacity of the ink.

E: Single Dot

Indicates the amount of ink required when replacing ink in print head.

F: Lower Limit Line

Indicates the lower limit of the sufficient amount of ink to print. Refill the ink tank before the amount of ink is below this line.

G: Print Head Holder

The print head is pre-installed.

Operation Panel

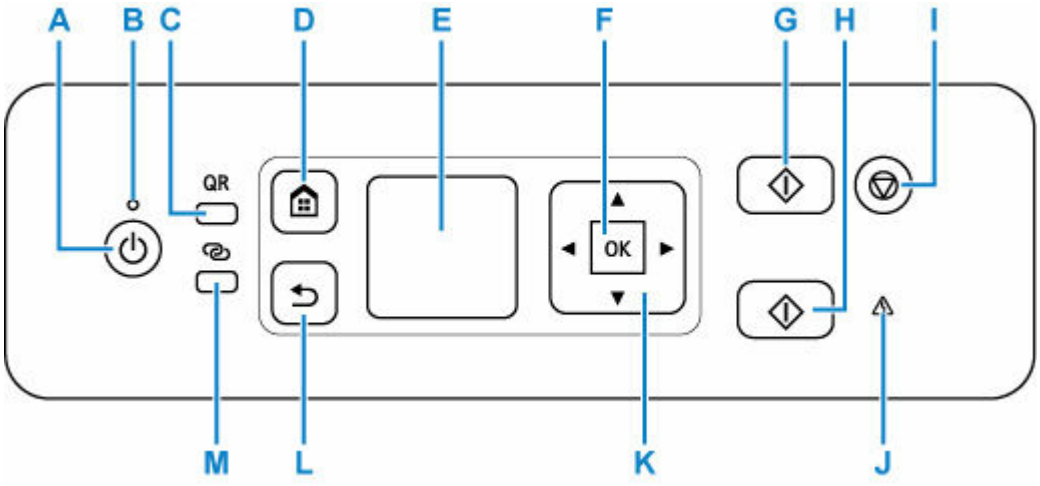

A: ON button

Turns the power on or off. Before turning on the power, make sure that the document cover is closed.

➡ Turning the Printer On and Off

B: ON lamp

Lights after flashing when the power is turned on.

C: QR button

A QR code is displayed when you press the button while the **QR** button lights. You can then gain access to the Online Manual that describes operative functions.

Cost of connecting to Internet is to be born by the customer. Depending on your smartphone or tablet, you may not be able to scan a QR code.

D: HOME button

Used to display the HOME screen.

➡ LCD and Operation Panel

E: LCD (Liquid Crystal Display)

Displays messages, menu items, and operating status.

➡ LCD and Operation Panel

F: OK button

Finalizes your selection of items. Also used to resolve errors.

G: Black button

Starts black & white copying, scanning, etc.

H: Color button

Starts color copying, scanning, etc.

I: Stop button

Cancels operation when print, copy, or scan job is in progress.

J: Alarm lamp

Lights or flashes when an error occurs.

K: ▲▼◀ ▶ buttons

Used to select a menu or setting item. These buttons are also used for entering characters.

L: Back button

Returns to the previous screen.

M: Wireless connect button

When you hold down the button, the button lights. The printer is then put into the standby mode for easy connection in a PC and smartphone.

➡ Easy Wireless Connect

Power Supply

- Checking that Power Is On
- Turning the Printer On and Off
- Unplugging the Printer

Checking that Power Is On

The **ON** lamp is lit when the printer is turned on.

Even if the LCD is off, if the **ON** lamp is lit, the printer is on.

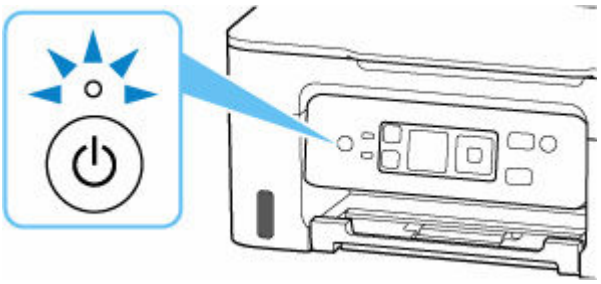

Note

- It may take a while for the printer to start printing immediately after you turn on the printer.
- The LCD will turn off if the printer is not operated for about 11 minutes. To restore the display, press any button or perform the print operation.

Turning the Printer On and Off

Turning on the printer

Press the ON button to turn on the printer.

The **ON** lamp flashes and then remains lit.

➡ Checking that Power Is On

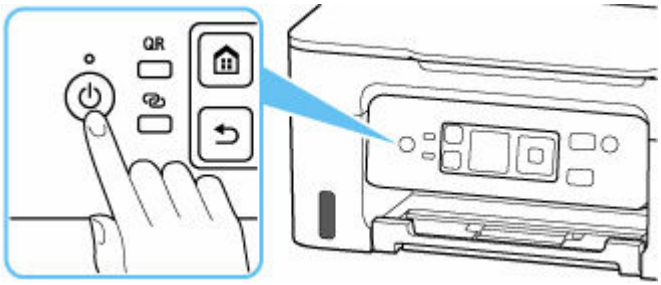

Note

- It may take a while for the printer to start printing immediately after you turn on the printer.
- If an error message is displayed on the LCD, see When Error Occurred.
- You can set the printer to automatically turn on when a print or scan operation is performed from a computer connected by USB cable or wireless network. This feature is set to off by default.

  From the printer

  ➡ ECO settings

  From the computer

  – For Windows:

  ➡ Managing the Printer Power

  – For macOS:

  ➡ Managing the Printer Power

Turning off the printer

Press the ON button to turn off the printer.

When the **ON** lamp stops flashing, the printer is turned off.

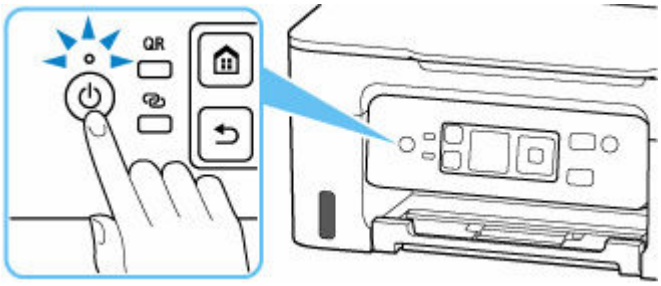

Important

- When you unplug the power cord after turning off the printer, be sure to confirm that the **ON** lamp is off.

Note

- You can set the printer to automatically turn off when no operations are performed or no print jobs are sent to the printer for a certain interval. This feature is set to on by default.

Unplugging the Printer

To unplug the power cord, follow the procedure below.

Important

- When you unplug the power cord, press the **ON** button, then confirm that the **ON** lamp is off. Unplugging the power cord while the **ON** lamp is lit or flashing may cause drying or clogging of the print head and print quality may be reduced.

1. Press the **ON** button to turn the printer off.

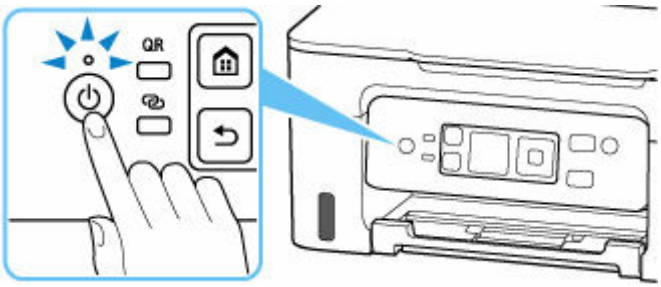

2. Confirm that the **ON** lamp is off.

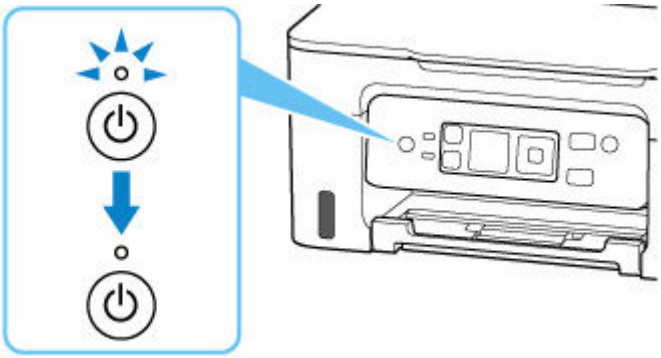

3. Unplug the power cord.

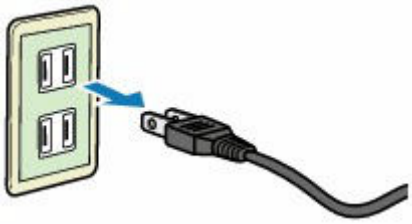

The specification of the power cord differs depending on the country or region of use.

LCD and Operation Panel

The HOME screen on the LCD appears when the printer is turned on.

- HOME Screen
- Basic Operation of the Operation Panel

HOME Screen

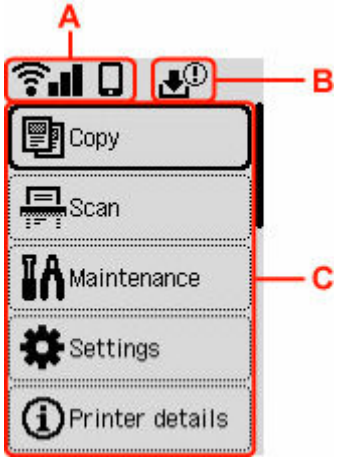

A: Network

Displays the current network status.

The icon differs depending on the network of use or the network status.

Wi-Fi is enabled and the printer is connected to the wireless router.

Note

- Depending on the signal state, the icon will change.

  (Signal strength: 81 % or more): You can use the printer over Wi-Fi without any problems.

  (Signal strength: 51 % or more): The problem such as the printer cannot print may occur according to the network status. We recommend placing the printer near the wireless router.

  (Signal strength: 50 % or less): The problem such as the printer cannot print may occur. Place the printer near the wireless router.

Wi-Fi is enabled but the printer is not connected to the wireless router.

Wireless Direct is enabled.

Network is disabled.

B: Maintenance cartridge information

A symbol appears if there is any information about the used space of the maintenance cartridge.

The maintenance cartridge is almost full. Replace the maintenance cartridge as soon as possible.

The maintenance cartridge is full. Replace the maintenance cartridge.

➡ Checking Maintenance Cartridge Status on LCD

C: Basic menu

Select each item when you want to use the basic functions of a printer, maintain a printer, or change each setting.

➡ Changing Settings from Operation Panel

Basic Operation of the Operation Panel

To determine a menu or setting items, select an ▲▼ button and press the **OK** button.

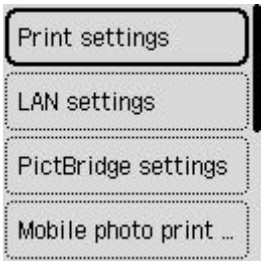

➡ Entering Numbers, Letters, and Symbols

Entering Numbers, Letters, and Symbols

The buttons on the operation panel allow you to enter (or change) characters, numbers, or symbols.

Adjust the setting to the position, to be changed, using the ◀ ▶ button and specify it by pressing the ▲ ▼ button.

After entry is completed, press the **OK** button for determination.

If a keyboard is displayed, select the ▲▼◀ ▶ button and press the **OK** button for entry.

Switch the character entry mode.

Switch the upper-/lower-case letters or symbols on a keyboard.

Delete the characters entered just before.

Insert a blank (space).

Determine the contents of entered data.

Note

- Only the input modes or characters available for input appear in their respective screens.
- You can switch the layout of a keyboard.

  ➡ Other device settings

Changing Settings

- Changing Printer Settings from Your Computer (Windows)
- Changing Printer Settings from Your Computer (macOS)
- Changing Settings from Operation Panel
- Handling Printer Configuration Using the Web Browser

Changing Printer Settings from Your Computer (Windows)

- Changing the Print Options
- Setting the Ink to be Used
- Managing the Printer Power
- Changing the Printer Operation Mode

Changing the Print Options

You can change the detailed printer driver settings for print data that is sent from an application software.

Specify this option if you encounter print failures such as part of an image data being cut off.

1. Open the printer driver setup window

2. Click **Print Options...** on the **Page Setup** tab

   The **Print Options** dialog box opens.

3. Change the individual settings

   If necessary, change the setting of each item, and then click **OK**.

   The **Page Setup** tab is displayed again.

Setting the Ink to be Used

This feature enables you to specify which ink to use when printing.

1. Open the printer driver setup window

2. Click **Print Options...** on the **Page Setup** tab

   The **Print Options** dialog box appears.

3. Select the ink to be used from **Print With**

   Select the ink to be used for printing and click **OK**.

4. Click **OK** on the **Page Setup** tab

   When you perform printing, the specified ink will be used.

Important

- When the following settings are specified, **Black Only** does not function because the printer uses an ink other than black to print documents.
  - Other than **Plain Paper**, **Envelope**, **Ink Jet Hagaki (A)**, **Hagaki K (A)**, **Hagaki (A)**, or **Hagaki** is selected for **Media Type** on the **Media/Quality** tab
  - A checkmark is added to **Borderless Printing** on the **Page Setup** tab
- Do not detach the print head that is not in use. Printing cannot be performed while either print head is detached.

Managing the Printer Power

This function allows you to manage the printer power from the Canon IJ Printer Assistant Tool.

Power Off

The **Power Off** function turns off the printer. When you use this function, you will not be able to turn the printer on from the Canon IJ Printer Assistant Tool.

1. Open Canon IJ Printer Assistant Tool

2. Perform power off

   Click **Power Off**. When the confirmation message appears, click **OK**.

   The printer power switches off.

Auto Power

Auto Power allows you to set **Auto Power On** and **Auto Power Off**.
The **Auto Power On** function automatically turns on the printer when data is received.
The **Auto Power Off** function automatically turns off the printer when there are no operations from the printer driver or the printer for a specified period of time.

1. Open the Canon IJ Printer Assistant Tool

2. Check that the printer is on and then click **Auto Power**

   The **Auto Power Settings** dialog box will open.

   Note

   - If the printer is off or if communication between the printer and the computer is disabled, an error message may appear because the computer cannot collect the printer status.
     If this happens, click **OK** to display the most recent settings specified on your computer.

3. If necessary, complete the following settings:

   Auto Power On

   Select the auto-power on setting.
   Select **Disable** to prevent the auto-power on feature from functioning.
   Check that the printer is on, and then click **OK** to change the printer settings.
   Select **Enable** to turn the printer on automatically when print data is sent to it.

   Auto Power Off

   Specify the time from the list. When this time lapses without any operations from the printer driver or the printer, the printer is turned off automatically.

Note

- Enabling auto power on, disabling auto power off, or extending the time for auto power off will increase power consumption.

4. Apply the settings

Click **OK**. When the confirmation message appears, click **OK**.

The setting is enabled after this. When you want to disable this function, select **Disable** from the list according to the same procedure.

Note

- When the printer is turned off, the Canon IJ Status Monitor message varies depending on the **Auto Power On** setting.
  When the setting is **Enable**, "Printer is standing by" is displayed. When the setting is **Disable**, "Printer is offline" is displayed.

Changing the Printer Operation Mode

If necessary, switch between various modes of printer operation.
If you want to change printer settings, open one of the following two Custom Settings Tab, and configure settings.

- **Custom Settings** in the **Maintenance** Tab
- **Custom Settings** in Canon IJ Printer Assistant Tool

For functions related to print settings, go to **Custom Settings** in the **Maintenance** Tab. For other settings, go to **Custom Settings** in Canon IJ Printer Assistant Tool.

Custom Settings in the Maintenance Tab

1. Open the **Maintenance** Tab

2. Check that the printer power is on, and click **Custom Settings**

   The **Custom Settings** dialog box opens.

   Note

   - If the printer is off or if communication between the printer and the computer is disabled, an error message may appear because the computer cannot collect the printer status.
     If this happens, click **OK** to display the most recent settings specified on your computer.

3. Configure settings

   If necessary, switch between various modes of printer operation.

4. Apply the settings

   Click **OK** and when the confirmation message appears, click **OK**.

   The printer operates with the modified settings hereafter.

Custom Settings in Canon IJ Printer Assistant Tool

1. Open the Canon IJ Printer Assistant Tool

2. Check that the printer is on and then click **Custom Settings**

   The **Custom Settings** dialog box opens.

   Note

   - If the printer is off or if communication between the printer and the computer is disabled, an error message may appear because the computer cannot collect the printer status.
     If this happens, click **OK** to display the most recent settings specified on your computer.

3. Configure settings

If necessary, switch between various modes of printer operation.

4. Apply the settings

Click **OK** and when the confirmation message appears, click **OK**.

The printer operates with the modified settings hereafter.

Changing Printer Settings from Your Computer (macOS)

- Managing the Printer Power
- Changing the Printer Operation Mode

Managing the Printer Power

Printer power supply is operated from Remote UI.

Energy saving settings

Energy saving settings allow you to set Auto power off and Auto power on.

Auto power off is the function wherein the printer automatically turns itself off, when data is not sent or the printer remains inactive for a certain period.
The Auto power on function automatically turns on the printer when data is received.

1. Selecting **Printer settings** from Remote UI

2. Click **Energy saving settings**

3. Complete the following settings:

   Auto power off
   Specify the time from the list. Printer automatically turns itself off, when data is not sent within the specified time or the printer has remained inactive.

   Auto power on
   When you check this check box, the printer automatically turns itself on when data is sent.

   Note

   - Enabling auto power on, disabling auto power off, or extending the time for auto power off will increase power consumption.

4. Apply the settings

   Click **OK**.
   The printer will operate with the changed settings hereafter.

Changing the Printer Operation Mode

If necessary, switch between various modes of printer operation.

1. Check whether the printer is on and select **Printer settings** from Remote UI

2. If necessary, complete the following settings:

   Print settings - Prevent paper abrasion

   The printer can increase the gap between the print head and the paper during high-density printing to prevent paper abrasion.
   Check this check box to prevent paper abrasion.

   Custom settings - Detect paper setting mismatch

   If the check box is deselected, at the time of printing from PC, you can continue to print without the message display even if the paper settings set in the Print dialog differs from the paper information registered to the printer.

   Ink drying wait time

   You can set the length of the printer rest time until printing of the next page begins. The wait time becomes longer as the value set in the list increases, and shorter as the value decreases.
   If the paper gets stained because the next page is ejected before the ink on the printed page dries, increase the ink drying wait time.

3. Apply the settings

   Click **OK**.

   The printer operates with the modified settings hereafter.

Changing Settings from Operation Panel

- Changing Settings from Operation Panel
- Setting Items on Operation Panel
- Print settings
- LAN settings
- PictBridge settings
- Mobile photo print settings
- Other device settings
- Language selection
- Firmware update
- Reset settings
- Feed settings
- Web service setup
- ECO settings
- Quiet setting
- System information
- Checking the Total Number of Uses of Printer

Changing Settings from Operation Panel

This section describes the procedure to change the settings, taking the steps to specify prevent abrasion as an example.

1. Check that printer is turned on.

2. Select **Settings** on the HOME screen.

   ➡ LCD and Operation Panel

3. Select **Device settings**.

4. Select a setting item to adjust.

   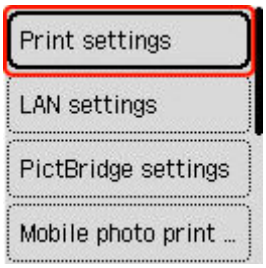

   The setting screen for the selected item is displayed.

5. Select a setting item.

   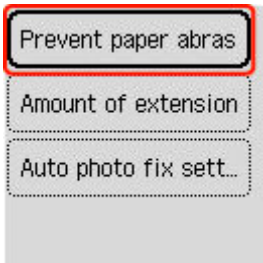

6. Select a setting to specify.

   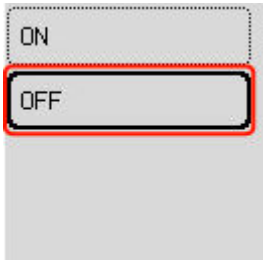

For more on setting items on the operation panel:

➡ Setting Items on Operation Panel

Setting Items on Operation Panel

Items for Printer

- Other device settings
- Language selection
- Web service setup
- ECO settings
- Quiet setting

Items for Paper/Printing

- Print settings
- PictBridge settings
- Mobile photo print settings
- Feed settings

Items for Maintenance/Management

- LAN settings
- Firmware update
- Reset settings
- System information
- Checking the Total Number of Uses of Printer

Print settings

Select this setting item from **Device settings** in **Settings**.

- **Prevent paper abrasion**

  Use this setting only if the print surface becomes smudged.

  Important

  - Be sure to set this back to **OFF** after printing since it may result in lower printing speed or lower print quality.

- **Amount of extension**

  Selects the amount of image that extends off the paper when printing in borderless (full).

  When performing Borderless Printing, slight cropping may occur at the edges since the printed image is enlarged to fill the whole page. You can change the width to be cropped from the borders of the original image as needed.

  Important

  - Settings will become ineffective in the following situations:
    - Printing from a PictBridge (Wi-Fi) supporting device.
    - Printing from a standard form.

  Note

  - When performing settings from application software or the printer driver, these settings will be prioritized.
  - If printouts contain margins even though you are printing in Borderless, specifying **Extended amount: Large** for this setting may help solve the problem.

- **Auto photo fix setting**

  When **ON** is selected, you can select whether to print photos using the Exif information recorded in the image files when **Default*** or **On** is selected in printing with a PictBridge (Wi-Fi) compliant device.

  * When **Default** is selected for the print setting on the PictBridge (Wi-Fi) compliant device, select **Auto photo fix** for photo fix in **PictBridge settings**.

LAN settings

Select this setting item from **Settings**.

➡ Wi-Fi
➡ Wireless Direct

To print the network settings, select **Print details** and select **Yes**.

➡ Printing Network Settings

Important

- The network settings printout contains important information about your network. Handle it with care.

Wi-Fi

- **2.4GHz/5GHz Switch**

  Select a frequency.

- **Wi-Fi setting list**

  The network settings information of the printer appears when it is connected by Wi-Fi. (Some setting items are not displayed depending on the printer settings.)

Items	Setting
Connection	Enabled (connected)/Enabled (disconnected)/Disable
Network name (SSID)	XXXXXXXXXXXXXXXX XXXXXXXXXXXXXXXX
Frequency	2.4 GHz/5 GHz
Wi-Fi security	Inactive/WPA-PSK(TKIP)/WPA-PSK(AES)/WPA2-PSK(TKIP)/WPA2-PSK(AES)/WPA3-SAE(AES)
Signal strength (%)	XXX
IPv4 address	XXX. XXX. XXX. XXX
IPv4 subnet mask	XXX. XXX. XXX. XXX
IPv4 default gateway	XXX. XXX. XXX. XXX
IPv6 link-local address	XXXX: XXXX: XXXX: XXXX: XXXX: XXXX: XXXX: XXXX
MAC address (Wi-Fi)	XX:XX:XX:XX:XX:XX
Printer name	XXXXXXXXXXXXXXX
Bonjour service name	XXXXXXXXXXXXX XXXXXXXXXXXXX XXXXXXXXXXXXX XXXXXXXXXXXXX

("XX" represents alphanumeric characters.)

- **Advanced mode**

  Enables/disables Wi-Fi.

- **Wi-Fi setup**

  Selects the setup method for Wi-Fi connection.

  - **Easy wireless connect**

    Select if you specify the settings of the access point information to the printer directly from a device (e.g. smartphone, or tablet) without operating the wireless router. Follow the on-screen instructions of the connecting device for the setup procedure.

  - **Manual connect**

    Select when you perform settings for Wi-Fi manually using the operation panel of the printer.

  - **WPS (Push button method)**

    Select when you perform settings for Wi-Fi using a wireless router supporting a Wi-Fi Protected Setup (WPS) push button method. Follow the on-screen instructions during setup.

  - **Other connection types**

    - **WPS (PIN code method)**

      Select when you perform settings for Wi-Fi using a wireless router supporting a Wi-Fi Protected Setup (WPS) PIN code method. Follow the on-screen instructions during setup.

- **Advanced**

  For details on each setting item:

  ➡ Advanced

Wireless Direct

- **Wireless Direct setting list**

  The network settings information of the printer appears when it is connected by the wireless direct. (Some setting items are not displayed depending on the printer settings.)

Items	Setting
Connection	Enable/Disable
Network name(SSID)	DIRECT-XXXXXXXXX XXXXXXXXXXXXXXXX
Password	XXXXXXXXXX
Frequency	2.4 GHz/5 GHz
Wi-Fi security	WPA2-PSK(AES)
No. of devices connected now	XX/XX
IPv4 address	XXX. XXX. XXX. XXX
IPv4 subnet mask	XXX. XXX. XXX. XXX
IPv4 default gateway	XXX. XXX. XXX. XXX

IPv6 link-local address	XXXX: XXXX: XXXX: XXXX: XXXX: XXXX: XXXX: XXXX
MAC address (Wi-Fi)	XX:XX:XX:XX:XX:XX
Printer name	XXXXXXXXXXXXXXX
Bonjour service name	XXXXXXXXXXXXX XXXXXXXXXXXXX XXXXXXXXXXXXX XXXXXXXXXXXXX

("XX" represents alphanumeric characters.)

- **Connect to smartphone**

  Enables to connect the smartphone to the printer by reading the QR code displayed on the LCD with the smartphone, or also by manually obtaining the network name and password.

- **Advanced mode**

  Enables/disables Wireless Direct.

- **Change network name (SSID)**

  Changes the identifier (SSID/the printer's name displayed on a Wi-Fi Direct compatible device) for Wireless Direct.

- **Change password**

  Changes the password for Wireless Direct.

- **Confirm connection request**

  Selecting **ON** displays the confirmation screen when a Wi-Fi Direct compatible device is connecting the printer.

- **Advanced**

  For details on each setting item:

  ➡ Advanced

Advanced

- **Set printer name**

  Specifies the printer name. You can use up to 15 characters for the name.

  Note

  - You cannot use the same printer name as that already used for other LAN connected devices.
  - You cannot use a hyphen for the initial or last character of the printer name.

- **TCP/IP settings**

  Performs IPv4 or IPv6 setting.

- **WSD setting**

  Setting items when you use WSD (one of the network protocols supported in Windows).

- **Enable/disable WSD**

  Selects whether WSD is enabled or disabled.

  Note

  - When this setting is enabled, the printer icon is displayed on the Network Explorer in Windows.

- **Optimize inbound WSD**

  Selecting **Enable** allows you to receive the WSD printing data faster.

- **WSD scan from this device**

  Selecting **Enable** allows you to transfer the scanned data to the computer using WSD. To transfer the scanned data, press **Color** button.

  Note

  - When you forward the scanned data to the computer searched using WSD, you cannot select the document type.

- **Timeout setting**

  Specifies the timeout length.

- **Bonjour settings**

  Setting items when you use Bonjour.

  - **Enable/disable Bonjour**

    Selecting **Enable** allows you to use Bonjour to perform the network settings.

  - **Service name**

    Specifies the Bonjour service name. You can use up to 48 characters for the name.

    Note

    - You cannot use the same service name as that already used for other LAN connected devices.

- **LPR protocol setting**

  Enables/disables the LPR setting.

- **RAW protocol**

  Enables/disables RAW printing.

- **LLMNR**

  Enables/disables LLMNR (Link-Local Multicast Name Resolution). Selecting **Enable** allows the printer to detect printer's IP address from the printer name without a DNS server.

- **IPP settings**

  Selecting **Enable** allows you to print via the network with the IPP protocol.

- **PictBridge communication**

  Setting items for printing from a PictBridge (Wi-Fi) compliant device.

- **Enable/disable communication**

  Selecting **Enable** allows you to print from a PictBridge (Wi-Fi) compliant device.

- **Timeout setting**

  Specifies the timeout length.

- **Wi-Fi DRX setting**

  Selecting **Enable** allows you to activate discontinuous reception when using Wi-Fi (discontinuous reception).

  Note

  - Depending on the Wi-Fi router used, discontinuous reception may not be activated even though **Enable** is selected.
  - Discontinuous reception is enabled only while the printer is on standby. (The LCD is in the screen saver mode.)

- **IPsec settings**

  Selecting **Enable** allows you to specify the IPsec security.

Other device settings

Select this setting item from **Device settings** in **Settings**.

- **Key repeat**

  Selecting **ON** lets you quickly display candidate numbers or characters by holding down the ▲▼ button during character entry.

- **Original removal reminder**

  Selects whether the printer will display the reminder screen in case you forget to remove the original from the platen after scanning.

  Important

  - Depending on the type of original or the state of the document cover, forgetting to remove the original may not be detected.

- **Wi-Fi pairing settings**

  In order to connect Canon PRINT Inkjet/SELPHY, multiple configurations will be performed.

  - **Enable/disable pairing**

    Set the printer's Wi-Fi pairing function to enable or disable.

  - **Allow/block additional pairing**

    Permit or prohibit the addition of pairing with Canon PRINT Inkjet/SELPHY used in another device.

  - **Delete paired devices**

    Cancel all Canon PRINT Inkjet/SELPHY pairing.

- **Keyboard layout**

  Select the keyboard layout from the following three types.

  - **QWERTY**
  - **QWERTZ**
  - **AZERTY**

- **Ink level monitor**

  - **Reset ink lev. count**

    Resets the remaining ink count.

    Important

    - After refilling the ink to the upper limit line of the ink tank, reset the remaining ink count.
    - If the remaining ink count is reset when the ink tank is not full, the remaining ink level cannot be detected properly.

  - **Ink notification**

    Enables or disables the function which notifies the remaining ink.

Important

- If the remaining ink level notification function is disabled, visually inspect the remaining ink and refill the ink tanks as necessary. Continuing printing with ink below the lower limit line of an ink tank may prevent satisfactory print quality.
- When changing the remaining ink level notification function from disabled to enabled, it is necessary to refill all ink tanks up to the upper limit line.

  ➡ Refilling Ink Tanks

- **Fixed print quality**

  Specifies print quality when printing on plain paper.

Language selection

Select this setting item from **Device settings** in **Settings**.

Changes the language for the messages and menus on the LCD.

Japanese / English / German / French / Italian / Spanish / Portuguese / Dutch / Danish / Norwegian / Swedish / Finnish / Russian / Ukrainian / Polish / Czech / Slovene / Hungarian / Slovak / Croatian / Romanian / Bulgarian / Turkish / Greek / Estonian / Latvian / Lithuanian / Simplified Chinese / Korean / Traditional Chinese / Indonesian / Vietnamese

Firmware update

Select this setting item from **Device settings** in **Settings**.

You can update the firmware of the printer, check the firmware version, or perform settings of a notification screen, a DNS server and a proxy server.

Important

- When you use this function, make sure the printer is connected to the Internet.
- Do not turn off the power of a printer while firmware is being updated.

- **Install update**

  Performs the firmware update of the printer. If you select **Yes**, the firmware update starts. Follow the on-screen instructions to perform update.

- **Check current version**

  You can check the current firmware version.

- **Update notification setting**

  You can set the printer to display the firmware update information on the LCD when the firmware update is available.

  When **Idle/Power off** is selected, the printer informs you of the update during idle and the update information also appears when you press the **ON** button.

- **Auto update settings**

  Select **ON** to automatically update the firmware to the latest version.

- **DNS server setup**

  Performs settings for a DNS server. Select **Auto setup** or **Manual setup**. If you select **Manual setup**, follow the display on the LCD to perform settings.

- **Proxy server setup**

  Performs settings for a proxy server. Follow the display on the LCD to perform settings.

Reset settings

Select this setting item from **Device settings** in **Settings**.

You can set the settings back to the default.

- **Web service setup only**

  Sets the Web service settings back to the default.

- **LAN settings only**

  Sets the LAN settings back to the default.

- **Settings only**

  Returns the settings such as the paper size, media type, or other setting items back to the default.

- **Reset all**

  Sets all settings you made to the printer back to the default. The administrator password specified by Remote UI or Wi-Fi Connection Assistant reverts to the default setting.

  Note

  - You cannot set the following setting items back to the default:
    - The language displayed on the LCD
    - The current position of the print head
    - The cumulative usage count of copy, scan, etc. registered in **Print usage statistics**.
    - CSR (Certificate Signing Request) for encryption method (SSL/TLS) setting

Feed settings

Select this setting item from **Settings**.

Note

- By registering the paper size and the media type, the message can be displayed before printing starts when the paper size or the media type of the loaded paper differs from the paper settings.

  ➡ Paper Settings

- **Rear tray paper settings**

  Registers the paper size and the media type you load on the rear tray.

- **Check paper replacement**

  If you select **Enable**, the printer detects the paper replacement. A screen for confirming the setting of paper is displayed.

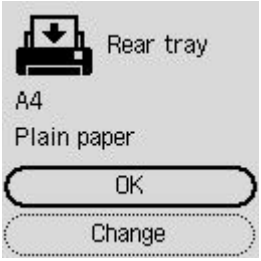

Note

- A screen for confirming the setting of paper is not displayed if you select **Disable**. Set the size and type of paper properly in **Rear tray paper settings** when making prints.
- For AirPrint of iOS/iPadOS, paper may be printed based on the paper size set during paper loading. It is recommended to set to **Enable** when making prints using an AirPrint function.

- **Detect paper setting mismatch**

  If you select **Enable**, the printer detects whether the paper size and the media type are identical with those registered in **Feed settings**. If printing starts with the settings that do not match, an error message is displayed on the LCD.

Note

- When **Disable** is selected, the settings in **Feed settings** is disabled.

Web service setup

Select this item from **Settings**.

- **Web service registration/Web service cancellation**

  Registers/Deletes Web service usage to use the printer device information to/from PIXMA/MAXIFY Cloud Link.

- **Web service connection setup**

  The following setting items are available.

  - **IJ Cloud Printing Center setup**

    Registers/Deletes the printer to/from Canon Inkjet Cloud Printing Center and sets the history saving.

  - **Check Web service setup**

    Make sure whether the printer is registered to Canon Inkjet Cloud Printing Center.

- **Issue registration code**

  In order to link the web service and printer, obtain the registration code from the service origin.

- **DNS server setup**

  Performs settings for a DNS server. Select **Auto setup** or **Manual setup**. If you select **Manual setup**, follow the display on the LCD to perform settings.

- **Proxy server setup**

  Performs settings for a proxy server. Follow the display on the LCD to perform settings.

ECO settings

This setting allows you to turn on/off the printer automatically to save electricity.

1. Check that printer is turned on.

2. Select **Settings** on the HOME screen.

   ➡ LCD and Operation Panel

3. Select **ECO settings**.

4. Specify settings as necessary.

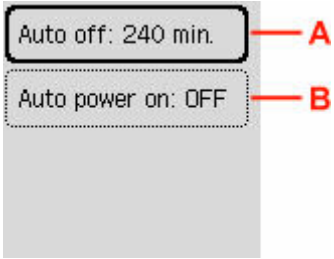

A: Specify the length of time to turn the printer off automatically when no operation is made or no printing data is sent to the printer.

B: Selecting **ON** enables the printer to turn on automatically when a scanning command from a computer or printing data is sent to the printer.

Note

- If this setting is changed, power consumption may increase.

Quiet setting

Enables this function on the printer if you want to reduce the operating noise, such as when printing at night.

1. Check that printer is turned on.
2. Select **Settings** on the HOME screen.

   ➡ LCD and Operation Panel

3. Select **Quiet setting**.
4. Select **ON**.

Important

- Operating speed is reduced compared to when **OFF** is selected.
- This function may not be so effective depending on the printer's setting. Furthermore, certain noise, such as when the printer is preparing for printing, is not reduced.

System information

Select this setting item from **Printer details**.

- **Current version**

  Displays the current firmware version.

- **Printer name**

  Displays the printer name currently specified.

- **Serial number**

  Displays the printer serial number.

- **Printed page count**

  Displays the printed sheet count in increments of 50 sheets. (Ex: In case of 25 sheets, [1-50] is displayed.)

- **MAC address (Wi-Fi)**

  Displays the MAC address for Wi-Fi.

- **Root cert. thumbprint (SHA-1)**

  Shows the root certification thumbprint (SHA-1) of the printer.

- **Root certificate thumbprint: SHA-256**

  Shows the root certification thumbprint (SHA-256) of the printer.

Checking the Total Number of Uses of Printer

The total number of uses of printer can be printed and checked.

1. Check that printer is turned on.
2. Load A4 or Letter-sized plain paper.
3. Select **Printer details** on the HOME screen.

   ➡ LCD and Operation Panel

4. Select **Print usage statistics**.
5. Select **Yes**.
6. Press the **OK** button.

   The total number of uses of printer is printed.

Specifications

General Specifications

Interface	**USB port:** Hi-Speed USB * **Network port:** Wi-Fi: IEEE802.11n / IEEE802.11g / IEEE802.11b / IEEE802.11a / IEEE802.11ac * A computer that complies with Hi-Speed USB standard is required. Since the Hi-Speed USB interface is fully upwardly compatible with USB 1.1, it can be used at USB 1.1. USB and the network can be used at the same time.
Operating environment	**Temperature:** 41 to 95 °F (5 to 35 °C) **Humidity:** 10 to 90 % RH (no condensation) * The performance of the printer may be reduced under certain temperature and humidity conditions. Recommended conditions: **Temperature:** 59 to 86 °F (15 to 30 °C) **Humidity:** 10 to 80 % RH (no condensation) * For the temperature and humidity conditions of papers such as photo paper, refer to the paper's packaging or the supplied instructions.
Storage environment	**Temperature:** 32 to 104 °F (0 to 40 °C) **Humidity:** 5 to 95 % RH (no condensation)
Power supply	AC 100-240 V, 50/60 Hz (The supplied power cord is only for the country or region you purchased.)
Power consumption	**Printing (Copy):** 16 W or less *1 **Standby (minimum):** 0.6 W or less *1*2 **Standby (all ports connected):** 1.2 W or less **OFF:** 0.1 W or less *1 USB connection to a PC *2 The wait time for standby cannot be changed.
External dimensions (W x D x H)	Approx. 16.4 x 13.3 x 7 in. (Approx. 416 x 337 x 177 mm) * With the trays retracted.
Weight	Approx. 13.2 lb (Approx. 6.0 kg) * With the Print Head installed.

Scan Specifications

Scanner driver	**Windows:** TWAIN 1.9 Specification, WIA
Maximum scanning size	A4/Letter, 8.5 x 11.7 in. (216 x 297 mm)
Optical resolution (horizontal x vertical)	600 x 1200 dpi * * Optical Resolution represents the maximum sampling rate based on ISO 14473.
Gradation (Input / Output)	**Gray:** 16 bit/8 bit **Color:** RGB each 16 bit/8 bit

Network Specifications

Communication protocol	SNMP, HTTP, TCP/IP (IPv4/IPv6)
Wi-Fi	**Supported Standards:** IEEE802.11n / IEEE802.11g / IEEE802.11b / IEEE802.11a / IEEE802.11ac **Frequency bandwidth:** 2.4 GHz / 5 GHz * A frequency band that can be used varies depending on country or region. **Communication distance:** Indoors 164 feet/50 m * Effective range varies depending on the installation environment and location. **Security:** WPA-PSK (TKIP/AES) WPA2-PSK (TKIP/AES) WPA3-SAE (AES) **Setup:** WPS (Push button configuration/PIN code method) Easy wireless connect

Minimum System Requirements

Conform to the operating system's requirements when higher than those given here.

Windows

Operating System	Windows 11, Windows 10, Windows 8.1, Windows 7 SP1 Note: Operation can only be guaranteed on a PC with pre-installed operating system. Printer driver and IJ Printer Assistant Tool support the following OS: Windows Server 2008 R2 SP1, Windows Server 2012 R2, Windows Server 2016, Windows Server 2019 and Windows Server 2022
Amount of hard disk space required for installing the driver	1.5 GB or more

	The necessary amount of hard disk space may be changed without notice.

macOS

Operating System	macOS Mojave 10.14.6 - macOS Monterey 12

Other Supported OS

iOS/iPadOS, Android, Chrome OS

Some functions may not be available with the supported OS.

Refer to the Canon web site for details.

Information in this manual is subject to change without notice.

Information about Paper

- **Supported Media Types**
  - Paper Load Limit
- **Unsupported Media Types**
- **Handling Paper**
- **Print Area**

Supported Media Types

For best results, choose paper designed for how you are printing. A variety of paper for documents as well as photos or illustrations is available from Canon. Use genuine Canon paper to print important photos, when possible.

- Media Types
- Page Sizes
- Paper Weight

Media Types

Genuine Canon paper

Note

- For warnings on use of the non-printable side, see each product's usage information.
- Page sizes and media types differ depending on the country or region where the paper is sold. For details on page sizes and media types, access the Canon website.
- Genuine Canon paper is not available in some countries or regions. Note that in the United States, Canon paper is not sold by model number. Instead, purchase paper by name.

Paper for printing documents:

- Canon Red Label Superior <WOP111>
- Canon Océ Office Colour Paper <SAT213>
- High Resolution Paper <HR-101N>

Paper for printing photos:

- Glossy Photo Paper "Everyday Use" <GP-501/GP-508>
- Photo Paper Glossy <GP-701>
- Photo Paper Plus Glossy II <PP-201/PP-208/PP-301>
- Photo Paper Pro Luster <LU-101>
- Photo Paper Plus Semi-gloss <SG-201>
- Matte Photo Paper <MP-101>

Paper for making original goods:

- Photo Stickers (16 stickers per sheet) <PS-108>
- Photo Stickers (Free Cutting) <PS-208>
- Photo Stickers (Variety Pack) <PS-808>
- Restickable Photo Paper <RP-101>
- Removable Photo Stickers <PS-308R>
- Magnetic Photo Paper <MG-101/PS-508>
- **Light Fabric Iron-on Transfers** <LF-101>

- **Dark Fabric Iron-on Transfers** <DF-101>
- **Double sided Matte Paper** <MP-101D>

Paper other than genuine Canon paper

- Plain Paper (including recycled paper)
- Envelopes

➡ Paper Load Limit
➡ Paper Settings on the Printer Driver and the Printer (Media Type) (Windows)

Note

- When printing photos saved on a PictBridge (Wi-Fi) compliant device, you must specify the page size and media type.
  ➡ Printing from Digital Camera

Page Sizes

You can use the following page sizes.

Note

- Page sizes and media types the printer supports differ depending on the OS you are using.

Standard sizes:

- Letter
- Legal
- Executive
- A6
- A5
- A4
- B5
- B-Oficio
- M-Oficio
- Foolscap
- Legal(India)
- KG/4"x6"(10x15)
- 5"x7"(13x18cm)
- 7"x10"(18x25cm)
- 8"x10"(20x25cm)
- L(89x127mm)
- 2L(127x178mm)

- Square 3.5"
- Square 5"
- Hagaki
- Hagaki 2
- Envelope Com 10
- Envelope DL
- Nagagata 3
- Nagagata 4
- Yougata 4
- Yougata 6
- Envelope C5
- Envelope Monarch
- Card 2.17"x3.58"

Special sizes

- Minimum size: 2.17 x 3.50 in. (55.0 x 89.0 mm)
- Maximum size: 8.50 x 47.24 in. (216.0 x 1200.0 mm) *

* When **Height** of **Page Size** is set to a value exceeding 26.61 in. (676 mm), **Media Type** is set to **Plain Paper**.

Paper Weight

You can use paper in the following weight range.

- Plain paper: From 17 to 28 lb (64 to 105 g /m^2)

Paper Load Limit

This section shows the paper load limits of the rear tray and the paper output tray.

➡ Paper Load Limits of Rear Tray
➡ Paper Load Limit of Paper Output Tray

Note

- Page sizes and media types differ depending on the country or region where the paper is sold. For details on page sizes and media types, access the Canon website.

Paper Load Limits of Rear Tray

Genuine Canon Paper

Paper for printing documents:

Media Name <Model No.>	Rear Tray
Canon Red Label Superior <WOP111>	Approx. 100 sheets
Canon Océ Office Colour Paper <SAT213>	Approx. 80 sheets
High Resolution Paper <HR-101N>*1	Approx. 80 sheets

Paper for printing photos:

Media Name <Model No.>	Rear Tray
Glossy Photo Paper "Everyday Use" <GP-501/GP-508>*2 Photo Paper Glossy <GP-701>*2 Photo Paper Plus Glossy II <PP-201/PP-208/PP-301>*2 Photo Paper Pro Luster <LU-101>*2 Photo Paper Plus Semi-gloss <SG-201>*2 Matte Photo Paper <MP-101>	A4, Letter, 5"x7"(13x18cm), 8"x10"(20x25cm), 2L(127x178mm): 10 sheets KG/4"x6"(10x15), L(89x127mm), Square 3.5", Square 5", Hagaki: 20 sheets

Paper for making original goods:

Media Name <Model No.>	Rear Tray
Photo Stickers (16 stickers per sheet) <PS-108> Photo Stickers (Free Cutting) <PS-208> Photo Stickers (Variety Pack) <PS-808> Restickable Photo Paper <RP-101> Removable Photo Stickers <PS-308R> Magnetic Photo Paper <MG-101/PS-508> **Light Fabric Iron-on Transfers** <LF-101> **Dark Fabric Iron-on Transfers** <DF-101>	1 sheet

Double sided Matte Paper <MP-101D>	

Paper other than Genuine Canon Paper

Common Name	Rear Tray
Plain Paper (including recycled paper)*1	Approx. 100 sheets (Legal, B-Oficio, M-Oficio, Foolscap, Legal(India): 10 sheets)
Envelopes	10 envelopes

*1 Normal feeding at maximum capacity may not be possible with some types of paper, or under very high or low temperature or humidity. In this case, load half the amount of paper or less.
*2 Feeding from a loaded stack of paper may leave marks on the printed side or prevent efficient feeding. In this case, load one sheet at a time.

Paper Load Limit of Paper Output Tray

Genuine Canon Paper

Paper for printing documents:

Media Name <Model No.>	Paper Output Tray
Canon Red Label Superior <WOP111> Canon Océ Office Colour Paper <SAT213> High Resolution Paper <HR-101N>	Approx. 50 sheets

Paper other than Genuine Canon Paper

Common Name	Paper Output Tray
Plain Paper (including recycled paper)	Approx. 50 sheets (Legal: 10 sheets)

When continuing printing with paper other than the above, we recommend removing already printed paper from the paper output tray to avoid smearing or discoloration.

Unsupported Media Types

Do not use the following types of paper. Using such paper will cause not only unsatisfactory results, but also the printer to jam or malfunction.

- Folded, curled, or wrinkled paper
- Damp paper
- Paper thinner than a postcard, including plain paper or notepad paper cut to a small size (when printing on paper smaller than A5)
- Picture postcards
- Postcards affixed with photos or stickers
- Envelopes with a double flap
- Envelopes with an embossed or treated surface
- Envelopes whose gummed flaps are already moistened and adhesive
- Any type of paper with holes
- Paper that is not rectangular
- Paper bound with staples or glue
- Paper with an adhesive surface on the back such as label seal
- Paper decorated with glitter, etc.

Handling Paper

- Be careful not to rub or scratch the surfaces of any types of paper when handling.
- Hold the paper as closely as possible to its edges and try not to touch the printing surface. The print quality may be degraded if the printing surface is smudged with sweat or oil that comes from your hands.
- Do not touch the printed surface until the ink is dried. Even when the ink is dried, be careful not to touch the printed surface as much as possible when handling. Due to the nature of the pigment ink, the ink on the printed surface may be removed when being rubbed or scratched.
- Take out only the necessary number of paper from the package, just before printing.
- To avoid curling, when you do not print, put unused paper back into the package and keep it on a level surface. And also, store it avoiding heat, humidity, and direct sunlight.

Economy Mode

By setting print quality to economy, the consumption of ink can be reduced. More printing is available compared with when print quality is set to standard.

- **Number of printable sheets (A4 plain paper)**

  Number of printable sheets per pigment black ink bottle

  Standard mode: 6,000 sheets

  Economy mode: 7,600 sheets

  Number of printable sheets per pigment color ink bottle

  Standard mode: 7,700 sheets

  Economy mode: 8,100 sheets

- **Measurement conditions**
  - Measurement images:

    Color printing: A4 color document ISO/IEC24712
  - Measurement method:

    Canon original
  - Paper type:

    Plain paper
  - Print driver setting:

    Setting to the default for plain paper (setting **Quality** to **Economy**).
  - Borderless printing:

    OFF

*The number of printable sheets is calculated based on the ink bottle filled from the second time on, instead of the ink bottle filled when the printer is used for the first time.

Printing

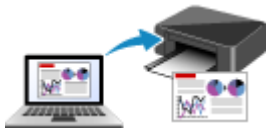

Printing from Computer

Printing from Smartphone/Tablet

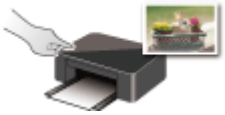

Printing Using Operation Panel

Printing from Digital Camera

Using PIXMA/MAXIFY Cloud Link

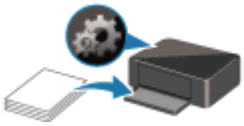

Paper Settings

Printing from Computer

- Printing from Application Software (Windows Printer Driver)
- Printing from Application Software (macOS AirPrint)
- Printing Using Canon Application Software
- Printing from Chrome OS

Printing from Application Software (Windows Printer Driver)

- Basic Printing Setup Basic
- Main Controls (Basic Settings Tab)
- Set Media Type, Quality, etc. (Media/Quality Tab)
- Set the Layout of Printed Documents (Page Setup Tab)
- Overview of the Printer Driver
- Updating the Driver

Basic Printing Setup

In the **Basic Settings** tab, you can print in various ways according to your purpose.

1. Check that printer is turned on

2. Open printer driver's setup screen

3. Select Profile (A)

   Select the print settings according to your purpose in **Profiles** on the **Basic Settings** tab.
   If you select a print setting, **Paper Size** and **Media Type** will change automatically.

   Note

   - When the paper size to be printed is selected from **Printer Paper Size**, the zoom level is automatically set according to the selected paper size.
     To select a zoom level of your choice, add a checkmark to **Zoom** and enter a number.

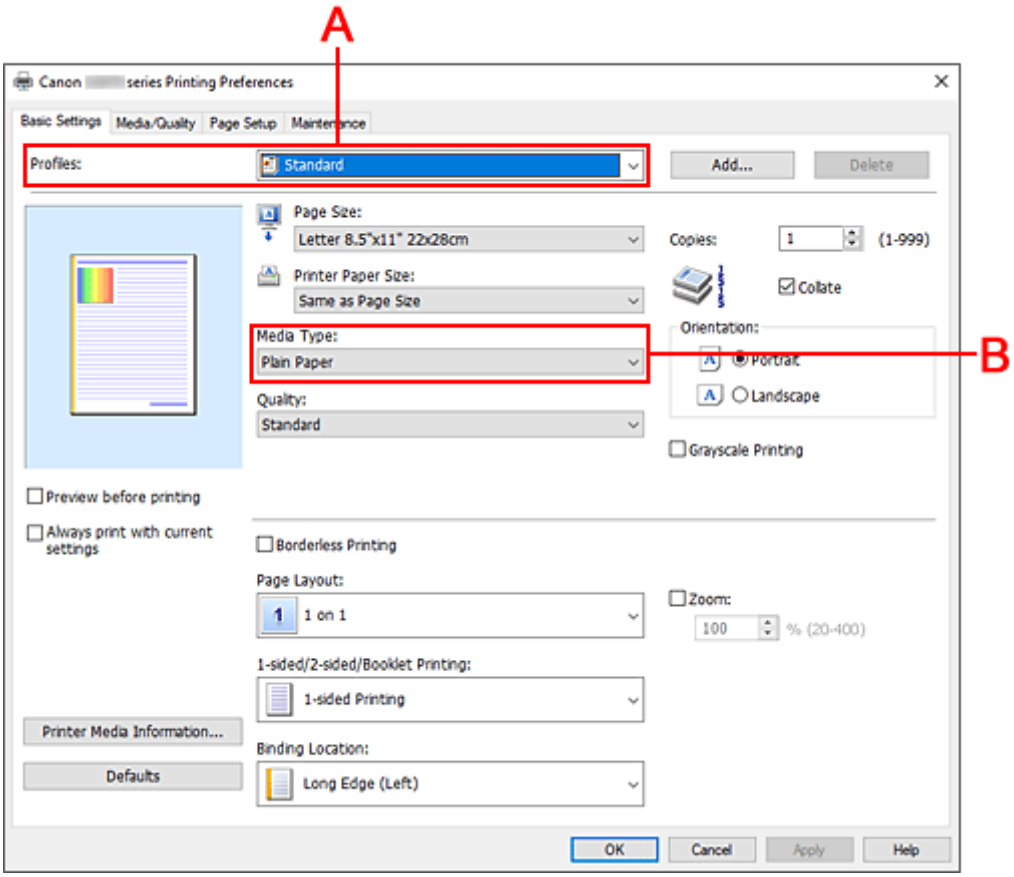

4. Select Media Type (B) According to Requirements

5. Set Paper

6. Click **OK**

Note

- For details about the paper information to be registered to the printer driver and on the printer, see the following:
  - Paper Settings on the Printer Driver and the Printer (Media Type)
  - Paper Settings on the Printer Driver and the Printer (Paper Size)

Main Controls (Basic Settings Tab)

- Basic Settings Tab Description
- Paper Settings on the Printer Driver and the Printer (Media Type)
- Paper Settings on the Printer Driver and the Printer (Paper Size)

Basic Settings Tab Description

The **Basic Settings** tab is for registering commonly used print settings. When you select a registered setting, the printer automatically switches to the preset items.

- Profiles
- Settings Preview
- Preview before printing
- Always print with current settings
- Page Size
- Printer Paper Size
- Media Type
- Quality
- Copies
- Collate
- Orientation
- Grayscale Printing
- Borderless Printing
- Page Layout
- Zoom
- 1-sided/2-sided/Booklet Printing
- Binding Location

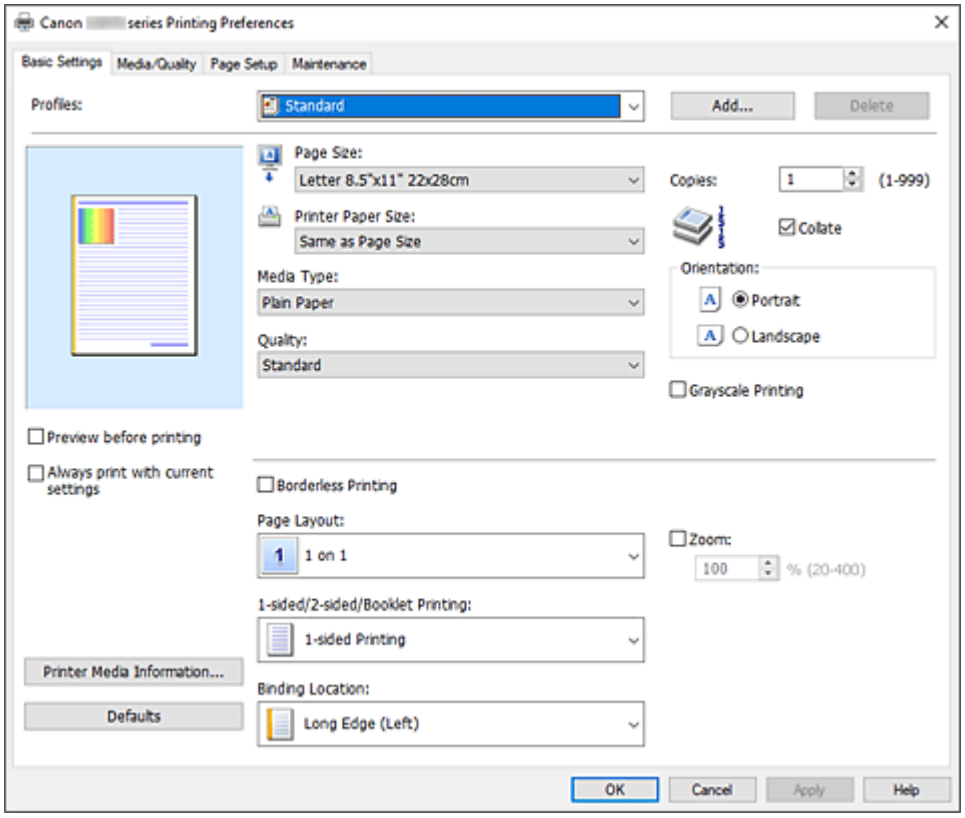

Profiles

The names and icons of frequently used printing profiles are registered. When you select a printing profile according to the purpose of the document, settings that match the purpose are applied.

You can also change a printing profile and register it under a new name. You can delete the registered printing profile.

Standard

These are the factory settings.

If **Page Size**, **Orientation**, and **Copies** were set from the application software, those settings have priority.

Photo Printing

If you select this setting when printing a photo, the photo paper and photo size generally used are set. The **Borderless Printing** check box is checked automatically.

If **Orientation** and **Copies** were set from the application software, those settings have priority.

Business Document

Select this setting when printing a general document.

If **Page Size**, **Orientation**, and **Copies** were set from the application software, those settings have priority.

Paper Saving

Select this setting to save paper when printing a general document. **Page Layout** is set to **2 on 1**, and **1-sided/2-sided/Booklet Printing** is set to **2-sided Printing (Manual)**.

If **Page Size**, **Orientation**, and **Copies** were set from the application software, those settings have priority.

Envelope

If you select this setting for printing an envelope, **Media Type** is set automatically to **Envelope**. In the **Envelope Size Setting** dialog box, select the size of the envelope to be used.

Greeting Card

When selected for printing a greeting card, the **Media Type** is automatically set to **Inkjet Greeting Card**. The **Quality** is also set to **High**, and a check-mark is added to **Borderless Printing**.

Note

- You cannot change the order of print settings.

Add...

Displays the **Add to Profiles** dialog box.

Click this button when you want to save the information that you set on the **Basic Settings**, **Media/Quality**, and **Page Setup** tabs to **Profiles**.

Delete

Deletes a registered printing profile.

Select the name of the setting to be deleted from **Profiles**, and click **Delete**. When a confirmation message is displayed, click **OK** to delete the specified printing profile.

Note

- Printing profiles that are registered in the initial settings cannot be deleted.

Settings Preview

The paper illustration shows how the original will be laid out on a sheet of paper.

You can check an overall image of the layout.

Preview before printing

Shows what the print result will look like before you actually print the data.

Check this check box to display a preview before printing.

Uncheck this check box if you do not want to display a preview.

Always print with current settings

Prints documents with the current settings starting from the next print execution.

When you select this function and then close the printer driver setup window, the information that you set on the **Basic Settings**, **Media/Quality**, and **Page Setup** tabs are saved and printing with the same settings is possible starting from the next print execution.

Important

- If you log on with a different user name, the settings that were set when this function was enabled are not reflected in the print settings.
- If a setting was specified on the application software, it has priority.

Page Size

Selects a page size.

Ensure that you select the same page size as you selected within the application.

If you select **Custom...**, the **Custom Paper Size** dialog box opens and allows you to specify any vertical and horizontal dimensions for the paper size.

Printer Paper Size

Selects the size of paper actually loaded into the printer.

Normally, it will appear as **Same as Page Size**, and the document is printed with no scaling.

If you select a paper size that is smaller than the **Page Size**, the document size will be reduced. If you select a paper size that is larger, the document size will be enlarged.

Also if you select **Custom...**, the **Custom Paper Size** dialog box opens and allows you to specify any vertical and horizontal dimensions for the paper size.

Media Type

Selects a type of printing paper.

Select a media type that matches the paper that is loaded in the printer. This ensures that printing is carried out properly for the specified paper.

Quality

Selects your desired printing quality.

Select one of the following to set the print quality level that is appropriate for the purpose.

To set the print quality level individually, click the **Media/Quality** tab, and for **Quality**, select **Custom**. The **Set...** becomes enabled. Click **Set...** to open the **Custom** dialog box, and then specify the desired settings.

High

Gives priority to print quality over printing speed.

Standard

Prints with average speed and quality.

Economy

Reduces the amount of ink used when printing.

Note

- Selecting **Economy** in **Quality** reduces ink consumption. This means that you can print more than if you have **Standard** selected.
  For details on Economy Mode, see "Economy Mode."

Copies

Specifies the number of copies you want to print. You can specify a value from 1 to 999.

Important

- When the application software that you used to create the document has the same function, specify the settings on the printer driver. However, if the print results are not acceptable, specify the function settings on the application software.

Collate

Check this check box to group together the pages of each copy when you want to print multiple copies. Uncheck this check box when you want to print with all pages of the same page number grouped together.

Important

- When the application software that you used to create the document has the same function, give priority to the printer driver settings. However, if the print results are not acceptable, specify the function settings on the application software. When you specify the number of copies and the printing order with both the application and this printer driver, the number of copies may be multiplied numbers of the two settings or the specified printing order may not be enabled.

Orientation

Selects the printing orientation.
If the application used to create your document has a similar function, select the same orientation that you selected in that application.

Portrait

Prints the document so that its top and bottom positions are unchanged relative to the paper feed direction. This is the default setting.

Landscape

Prints the document by rotating it 90 degrees relative to the paper feed direction.
You can change the rotation direction by going to the **Maintenance** tab, opening the **Custom Settings** dialog box, and then using **Rotate 90 degrees left when orientation is [Landscape]** check box.
To rotate the document 90 degrees to the left when printing, select the **Rotate 90 degrees left when orientation is [Landscape]** check box.

Grayscale Printing

This function converts the data to monochrome data when printing your document.

Borderless Printing

Performs borderless printing without any margins on the paper.
With the borderless printing function, the document to be printed is enlarged, so that it extends slightly off the paper. In other words, the document is printed without any margin.
To adjust the amount that the document extends beyond the paper, click the **Page Setup** tab, add a checkmark to **Borderless Printing**, and enter the value in **Amount of Extension**.

Page Layout

Selects the size of the document you want to print and the type of printing.

1 on 1 to 16 on 1

Multiple pages of document can be printed on one sheet of paper.

To change the page order, click **Preferences...**. In the **Page Layout Printing** dialog box that appears, specify **Page Order**.

Poster (1 x 2) to Poster (4 x 4)

This function enables you to enlarge the image data and divide the enlarged data into several pages to be printed. You can also glue together these sheets of paper to create large printed matter, such as a poster.

Preferences...

Opens the **Poster Printing** dialog box.

Click this button to set details on tiling/poster printing.

Zoom

Specifies an enlargement or reduction ratio for the document you want to print.

1-sided/2-sided/Booklet Printing

1-sided Printing

Select when performing single-sided printing.

2-sided Printing (Manual)

Select when performing duplex printing.

Booklet Printing

The booklet printing function allows you to print data for a booklet. Data is printed on both sides of the paper. This type of printing ensures that pages can be collated properly, in page number order, when the printed sheets are folded and stapled at the center.

Preferences...

Opens the **Booklet Printing** dialog box.

Click this button to set details on booklet printing.

Binding Location

Selects the stapling margin position. The printer analyzes the **Orientation** and **Page Layout** settings, and automatically selects the best stapling margin position. Check **Binding Location**, and select from the list to change it.

To specify the width of the binding margin, set it from the **Page Setup** tab.

Printer Media Information...

Displays **Printer Media Information** dialog box.

You can check the printer settings and apply the checked settings to the printer driver.

Defaults

Restores all the settings you have changed to their default values.

Click this button to return all settings on the **Basic Settings**, **Media/Quality**, and **Page Setup** tabs to their default values (factory settings).

Add to Profiles dialog box

This dialog box allows you to save the information that you set on the **Basic Settings**, **Media/Quality**, and **Page Setup** tabs and add the information to the **Profiles** list on the **Basic Settings** tab.

Name

Enter the name for the printing profile you wish to save.
Up to 255 characters can be entered.
The name appears, with its associated icon, in the **Profiles** list on the **Basic Settings** tab.

Options...

Opens the **Add to Profiles** dialog box.
Changes the details of printing profile to be saved.

Add to Profiles dialog box

Select the icons of the printing profiles to be registered to **Profiles**, and change the items to be saved in the printing profiles.

Icon

Select the icon for the printing profile you wish to save.
The selected icon appears, with its name, in the **Profiles** list on the **Basic Settings** tab.

Save the paper size setting

Saves the paper size to the printing profile in **Profiles**.
To apply the saved paper size when the printing profile is selected, check this check box.
If this check box is unchecked, the paper size is not saved, and consequently the paper size setting is not applied when the printing profile is selected. Instead the printer prints with the paper size specified with the application software.

Save the orientation setting

Saves the **Orientation** to the printing profile in **Profiles**.
To apply the saved print orientation when the printing profile is selected, check this check box.
If this check box is unchecked, the print orientation is not saved, and consequently the **Orientation** setting is not applied when the printing profile is selected. Instead the printer prints with the print orientation specified with the application software.

Save the copies setting

Saves the **Copies** setting to the printing profile in **Profiles**.
To apply the saved copies setting when the printing profile is selected, check this check box.
If this check box is unchecked, the copies setting is not saved, and consequently the **Copies** setting is not applied when the printing profile is selected. Instead the printer prints with the copies setting specified with the application software.

Custom Paper Size dialog box

This dialog box allows you to specify the size (width and height) of the custom paper.

Units

Select the unit for entering a user-defined paper size.

Paper Size

Specifies the **Width** and the **Height** of the custom paper. Measurement is shown according to the units specified in **Units**.

Page Layout Printing dialog box

1This dialog box allows you to select the number of document pages to be placed on one sheet of paper, the page order, and whether a page border line is to be printed around each document page. The settings specified in this dialog box can be confirmed in the settings preview on the printer driver.

Page Order

Specifies the document orientation to be printed on a sheet of paper.

Page Border

Prints a page border line around each document page. Check this check box to print the page border line.

Poster Printing dialog box

This dialog box allows you to select the size of the image to be printed. You can also make settings for cut lines and paste markers which are convenient for pasting together the pages into a poster.
The settings specified in this dialog box can be confirmed in the settings preview on the printer driver.

Print "Cut/Paste" in margins

Specifies whether to print the words "Cut" and "Paste" in the margins. These words serve as guidelines for pasting together the pages into a poster. Check this check box to print the words.

Note

- Depending on the environment of the printer driver you are using, this function may not be available.

Print "Cut/Paste" lines in margins

Specifies whether to print cut lines that serve as guidelines for pasting together the pages into a poster. Check this check box to print the cut lines.

Print page range

Specifies the printing range. Select **All** under normal circumstances.
Select **Pages** to specify a specific page or range.

Note

- If some of the pages have not been printed well, specify the pages that do not need to be printed by clicking them in the settings preview of the **Page Setup** tab. Only the pages shown on the screen will be printed this time.

Booklet Printing dialog box

This dialog box allows you to set how to bind the document as a booklet. Printing only on one side and printing a page border, can also be set in this dialog box.
The settings specified in this dialog box can be confirmed in the settings preview on the printer driver.

Preview Icon

Shows the settings made on the **Booklet Printing** dialog box.
You can check what the document will look like when printed as a booklet.

Margin for stapling

Specifies which side of the booklet is to be stapled.

Insert blank page

Selects whether to print the document on one side or both sides of the booklet.

Check this check box to print the document on one side of the booklet and select the side to be left blank from the list.

Margin

Specifies the width of the stapling margin.

The specified width becomes the stapling margin from the center of the sheet.

Page Border

Prints a page border line around each document page.

Check this check box to print the page border line.

Printer Media Information dialog box

This dialog box allows you to check the printer settings and apply the checked settings to the printer driver.

Paper Source

The paper source of the media is being displayed.

Media Type

Displays the **Media Type** that is currently set on the printer.

To apply the displayed setting to the printer driver, click **Set**.

Page Size

Displays the **Page Size** that is currently set on the printer.

To apply the displayed setting to the printer driver, click **Set**.

Paper Settings on the Printer Driver and the Printer (Media Type)

When you use this printer, selecting a media type and paper size that matches the print purpose will help you achieve the best print results.
Depending on the media type you are using, specify the media type settings on the printer driver or the printer's operation panel as described below.

Canon genuine papers (Document Printing)

Media name <Model No.>	Media Type in the printer driver	Paper information registered on the printer
Canon Red Label Superior <WOP111>	**Plain Paper**	**Plain paper**
Canon Océ Office Colour Paper <SAT213>	**Plain Paper**	**Plain paper**
High Resolution Paper <HR-101N>	**High Resolution Paper**	**High-Res**

Canon genuine papers (Photo Printing)

Media name <Model No.>	Media Type in the printer driver	Paper information registered on the printer
Photo Paper Plus Glossy II <PP-201/PP-208/PP-301>	**Photo Paper Plus Glossy II**	**PlusGlossyII**
Photo Paper Pro Luster <LU-101>	**Photo Paper Pro Luster**	**Pro Luster**
Photo Paper Plus Semi-gloss <SG-201>	**Photo Paper Plus Semi-gloss**	**Semi-gloss**
Glossy Photo Paper "Everyday Use" <GP-501/ GP-508>	**Glossy Photo Paper**	**Glossy**
Photo Paper Glossy <GP-701>	**Glossy Photo Paper**	**Glossy**
Matte Photo Paper <MP-101>	**Matte Photo Paper**	**Matte**

Canon genuine papers (Original Product)

Media name <Model No.>	Media Type in the printer driver	Paper information registered on the printer
Restickable Photo Paper <RP-101>	**Glossy Photo Paper**	**Glossy**
Removable Photo Stickers <PS-308R>	**Glossy Photo Paper**	**Glossy**
Magnetic Photo Paper <MG-101/PS-508>	**Glossy Photo Paper**	**Glossy**
Light Fabric Iron-on Transfers <LF-101>	**Light Fabric Iron-on Transfers**	**LF Iron**
Dark Fabric Iron-on Transfers <DF-101>	**Dark Fabric Iron-on Transfers**	**DF Iron**

Double sided Matte Paper <MP-101D>	**Matte Photo Paper**	**Matte**

Commercially available papers

Media name	Media Type in the printer driver	Paper information registered on the printer
Plain Paper (including recycled paper)	**Plain Paper**	**Plain paper**
Envelopes	**Envelope**	**Envelope**
Greeting Cards	**Inkjet Greeting Card**	**Others**
Card Stock	**Card Stock**	**Card stock**

Paper Settings on the Printer Driver and the Printer (Paper Size)

When you use this printer, selecting a paper size that matches the print purpose will help you achieve the best print results.
You can use the following paper sizes on this printer.

Printer Paper Size in the printer driver	Paper information registered on the printer
Letter 8.5"x11" 22x28cm	Letter
Legal 8.5"x14" 22x36cm	Legal
Executive 7.25"x10.5" 184.2x266.7mm	Executive
A6	A6
A5	A5
A4	A4
B5	B5
B-Oficio 8.5"x14" 216.0x355.0mm	B-Oficio
M-Oficio 8.50"x13.43" 216.0x341.0mm	M-Oficio
Foolscap/F4/Oficio2	FC/F4/Ofc2
Legal (India) 8.46"x13.58" 215x345mm	Legal (India)
4"x6" 10x15cm	4"x6"(10x15)
5"x7" 13x18cm	5"x7"(13x18)
7"x10" 18x25cm	7"x10"
8"x10" 20x25cm	8"x10"
L 89x127mm	L 89x127mm
2L 127x178mm	5"x7"(13x18)
Square 3.5"x3.5" 9x9cm	Square 3.5"
Square 5"x5" 13x13cm	Square 5"
Hagaki 100x148mm	Hagaki (size)
Hagaki 2 200x148mm	Hagaki 2
Envelope Com 10	Env. Com 10
Envelope DL	Envelope DL

Nagagata 3 4.72"x9.25"	**Nagagata 3**
Nagagata 4 3.54"x8.07"	**Nagagata 4**
Yougata 4 4.13"x9.25"	**Yougata 4**
Yougata 6 3.86"x7.48"	**Yougata 6**
Envelope C5	**Envelope C5**
Envelope Monarch 3.88"x7.5" 98.4x190.5mm	**Env Monarch**
Card 2.17"x3.58" 55x91mm	**Card**
Custom Size	**Others**

Printing on Postcards

1. Load postcard on the printer

2. Open the printer driver setup window

3. Select commonly used settings

   Display the **Basic Settings** tab, and for **Profiles**, select **Standard**.

4. Select the paper size

   For **Printer Paper Size**, select **Hagaki 100x148mm** or **Hagaki 2 200x148mm**.

   Important

   - Return postcards can be used only when you print them from the computer.
   - When printing a return postcard, always set the paper size to **Hagaki 2 200x148mm** from your application software or the printer driver.
   - Do not fold the return postcard. If a crease is formed, the printer will not be able to feed the postcard properly, and this condition will cause line shifts or a paper jam.
   - With return postcards, borderless printing cannot be used.

5. Select the media type

   Select the Hagaki you want to use from **Hagaki** in **Media Type**.

   Important

   - This printer cannot print on postcards that have photos or stickers attached.
   - You will get cleaner printing if you print the message side first and then print the address side.
   - The paper settings on the printer driver are different, depending on whether you are printing on the address side or the message side.
     For details about the paper information to be registered to the printer driver and on the printer, see the following:
     - Paper Settings on the Printer Driver and the Printer (Media Type)
     - Paper Settings on the Printer Driver and the Printer (Paper Size)

6. Set the print orientation

   To print the address horizontally, set **Orientation** to **Landscape**.

7. Select the print quality

   For **Quality**, select the quality according to your purpose.

8. Click **OK**

   When you perform printing, the data will be printed onto the postcard.

Setting Up Envelope Printing

1. Load envelope on the printer

2. Open the printer driver setup window

3. Select the media type

   Select **Envelope** from **Profiles** on the **Basic Settings** tab.

4. Select the paper size

   When the **Envelope Size Setting** dialog box is displayed, select the envelope size you want to use, and then click **OK**.

5. Set the orientation

   To print the addressee horizontally, select **Landscape** for **Orientation**.

   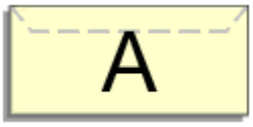

   Note

   - If **Envelope Com 10**, **Envelope DL**, **Yougata 4 4.13"x9.25"**, **Yougata 6 3.86"x7.48"**, **Envelope C5**, or **Envelope Monarch 3.88"x7.5" 98.4x190.5mm** is selected for **Printer Paper Size**, the printer rotates the paper 90 degrees to the left to print, regardless of the **Rotate 90 degrees left when orientation is [Landscape]** setting for **Custom Settings** in the **Maintenance** tab.

6. Select the print quality

   For **Quality**, select the quality according to your purpose.

7. Click **OK**

   When you perform print, the information is printed on the envelope.

Important

- When you perform envelope printing, guide messages are displayed.
  To hide the guide messages, check the **Do not show this message again** check box.
  To show the guide again, click the **View Printer Status** button on the **Maintenance** tab, and start the Canon IJ Status Monitor.
  Then click **Envelope Printing** from **Display Guide Message** of the **Option** menu to enable the setting.

Registering a Frequently Used Printing Profile

You can register the frequently used printing profile to **Profiles** on the **Basic Settings** tab. Unnecessary printing profiles can be deleted at any time.

Registering a Printing Profile

1. Open the printer driver setup window

2. Set the necessary items

   From **Profiles** on the **Basic Settings** tab, select the printing profile to be used and if necessary, change each of the settings.
   You can also register necessary items on the **Media/Quality** and **Page Setup** tabs.

3. Click **Add...**

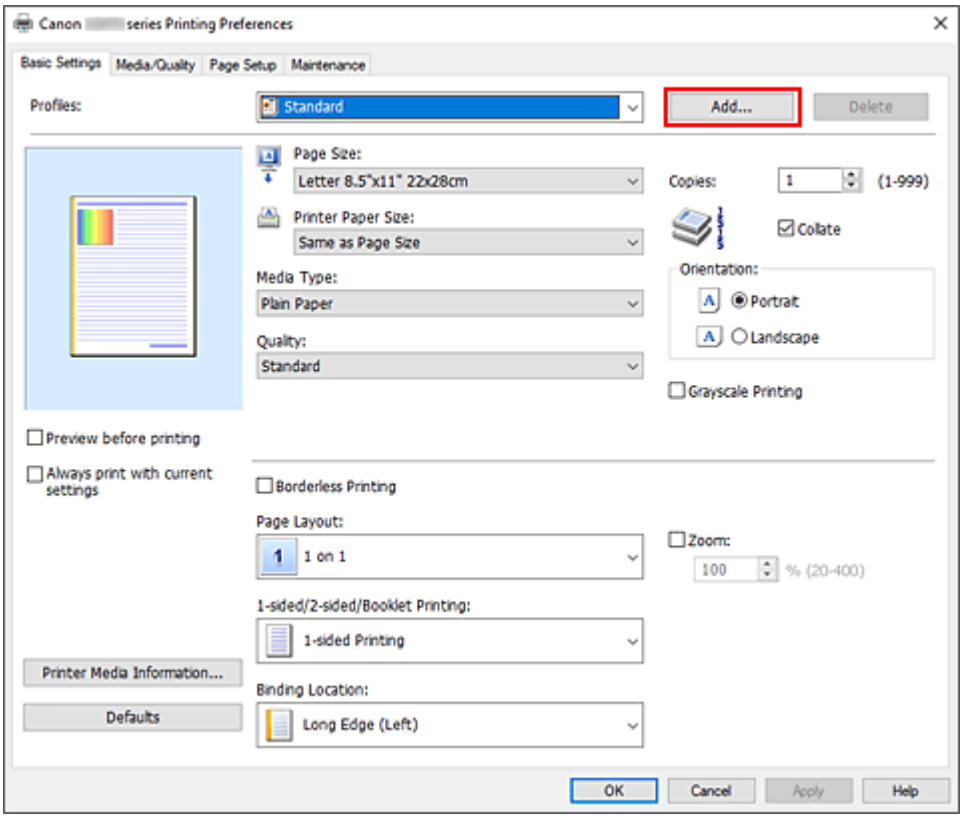

   The **Add to Profiles** dialog box opens.

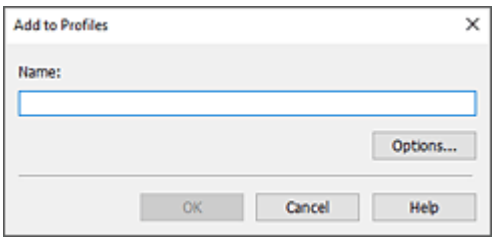

4. Save the settings

   Enter a name for the print settings to register in the **Name** field. If necessary, click **Options...**, set the items, and then click **OK**.
   In the **Add to Profiles** dialog box, click **OK** to save the print settings and return to the **Basic Settings** tab.
   The name and icon are displayed in **Profiles**.

Important

- To save the page size, orientation, and number of copies that was set in each sheet, click **Options...**, and check each item.

Note

- When you re-install the printer driver or upgrade the printer driver version, the print settings that are already registered will be deleted from **Profiles**.
  Registered print settings cannot be saved and preserved. If a profile is deleted, register the print settings again.

Deleting Unnecessary Printing Profile

1. Select the printing profile to be deleted

   Select the printing profile you want to delete from the **Profiles** list on the **Basic Settings** tab.

2. Delete the printing profile

   Click **Delete**. When the confirmation message appears, click **OK**.
   The selected printing profile is deleted from the **Profiles** list.

Note

- Printing profiles that are registered in the initial settings cannot be deleted.

Set Media Type, Quality, etc. (Media/Quality Tab)

- **Media/Quality Tab Description**
- **Adjust Colors**
- **Specifying Color Correction**
  - Optimal Photo Printing of Image Data
  - Adjusting Colors with the Printer Driver
  - Printing with ICC Profiles

Media/Quality Tab Description

The **Media/Quality** tab allows you to create a basic print setup in accordance with the media type. You can also adjust the print quality and color tones.

- Settings Preview
- Media Type
- Paper Source
- Quality
- Color/Intensity
- Grayscale Printing
- Preview before printing

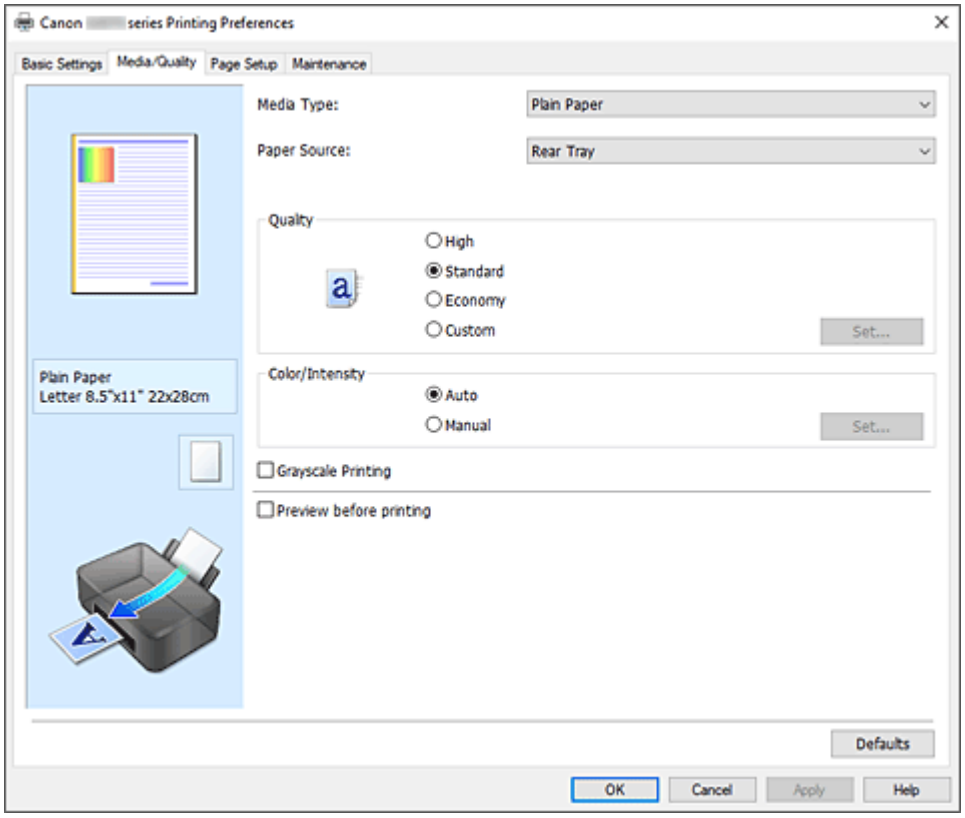

Settings Preview

The paper illustration shows how the original will be laid out on a sheet of paper.

You can check an overall image of the layout.

Media Type

Selects a type of printing paper.

Select a media type that matches the paper that is loaded in the printer. This ensures that printing is carried out properly for the specified paper.

Paper Source

Shows the source from which paper is supplied.

Rear Tray

Paper is always supplied from the rear tray.

Quality

Selects your desired printing quality.

Select one of the following to set the print quality level that is appropriate for the purpose.

Important

- Depending on the **Media Type** settings, the same print results may be produced even if the **Quality** is changed.

High

Gives priority to print quality over printing speed.

Standard

Prints with average speed and quality.

Economy

Reduces the amount of ink used when printing.

Note

- Selecting **Economy** in **Quality** reduces ink consumption. This means that you can print more than if you have **Standard** selected.
  For details on Economy Mode, see "Economy Mode."

Custom

Select this to set the print quality level individually.

Set...

Select **Custom** in **Quality** to make it clickable.

Open the **Custom** dialog box to set individual print quality levels.

Color/Intensity

Selects color adjustment method.

Auto

Cyan, **Magenta**, **Yellow**, **Brightness**, **Contrast**, and so on are adjusted automatically.

Manual

Select when you set the individual settings such as **Cyan**, **Magenta**, **Yellow**, **Brightness**, **Contrast**, etc. and **Color Correction** method.

Set...

Select **Manual** for **Color/Intensity** to enable this button.

In the **Manual Color Adjustment** dialog box, you can adjust individual color settings such as **Cyan**, **Magenta**, **Yellow**, **Brightness**, and **Contrast** on the **Color Adjustment** tab, and select the **Color Correction** method on the **Matching** tab.

Note

- If you want to use an ICC profile to adjust colors, use the **Manual Color Adjustment** dialog box to set the profile.

Grayscale Printing

This function converts the data to monochrome data when printing your document.

Check this check box to print a color document in monochrome.

Preview before printing

Shows what the print result will look like before you actually print the data.

Check this check box to display a preview before printing.

Defaults

Restores all the settings you have changed to their default values.
Clicking this button restores all the settings on the current screen to their default values (factory settings).

Custom dialog box

Set the quality level, and select the desired print quality.

Quality

You can use the slider bar to adjust the print quality level.

Important

- Certain print quality levels cannot be selected depending on the settings of **Media Type**.

Note

- The **High**, **Standard**, or **Economy** print quality modes are linked with the slider bar. Therefore when the slider bar is moved, the corresponding quality and value are displayed on the left. This is the same as when the corresponding radio button is selected for **Quality** on the **Media/Quality** tab.

Color Adjustment Tab

This tab allows you to adjust the color balance by changing the settings of the **Cyan**, **Magenta**, **Yellow**, **Brightness**, and **Contrast** options.

Preview

Shows the effect of color adjustment.
The color and brightness change when each item is adjusted.

Note

- The graphic is in monochrome when the **Grayscale Printing** check box is checked.

View Color Pattern

Displays a pattern for checking color changes produced by color adjustment.
If you want to display the preview image with a color pattern, check this check box.

Cyan / Magenta / Yellow

Adjusts the strengths of **Cyan**, **Magenta**, and **Yellow**.
Moving the slider to the right makes a color stronger, and moving the slider to the left makes a color weaker.
You can also directly enter a value linked to the slider. Enter a value in the range from -50 to 50.
This adjustment changes the relative amount of ink of each color used, which alters the total color balance of the document. Use your application if you want to change the total color balance significantly. Use the printer driver only if you want to adjust the color balance slightly.

Brightness

Adjusts the brightness of your print. You cannot change the levels of pure white and black. However, the brightness of the colors between white and black can be changed. Moving the slider to the right brightens (dilutes) the colors, and moving the slider to the left darkens (intensifies) the colors. You

can also directly enter brightness values that are linked to the slider bar. Enter a value in the range from -50 to 50.

Contrast

Adjusts the contrast between light and dark in the image to be printed.
Moving the slider to the right increases the contrast, moving the slider to the left decreases the contrast.
You can also directly enter a value linked to the slider. Enter a value in the range from -50 to 50.

Matching Tab

Allows you to select the method for adjusting colors to match the type of document to be printed.

Color Correction

Allows you to select **Driver Matching**, **ICM**, or **None** to match the purpose of the print operation.

Driver Matching

With Canon Digital Photo Color, you can print sRGB data with color tints that most people prefer.

ICM

Adjusts the colors by using an ICC profile when printing.

Important

- If the application software is set so that ICM is disabled, **ICM** is unavailable for **Color Correction** and the printer may not be able to print the image data properly.

None

Disables color adjustment with the printer driver. Select this value when you are specifying an individually created printing ICC profile in an application software to print data.

Set the Layout of Printed Documents (Page Setup Tab)

- Page Setup Tab Description
- Setting the Number of Copies and Printing Order
- Perform Borderless Printing

Page Setup Tab Description

The **Page Setup** tab allows you to determine how a document is to be arranged on the paper. Also, this tab allows you to set the number of copies and the order of printing. If the application which created the document has a similar function, set them with the application.

- Settings Preview
- Page Size
- Printer Paper Size
- Copies
- Print from Last Page
- Collate
- Orientation
- Rotate 180 degrees
- Borderless Printing
- Page Layout
- Zoom
- 1-sided/2-sided/Booklet Printing
- Binding Location
- Specify Margin
- Print Options
- Stamp/Background

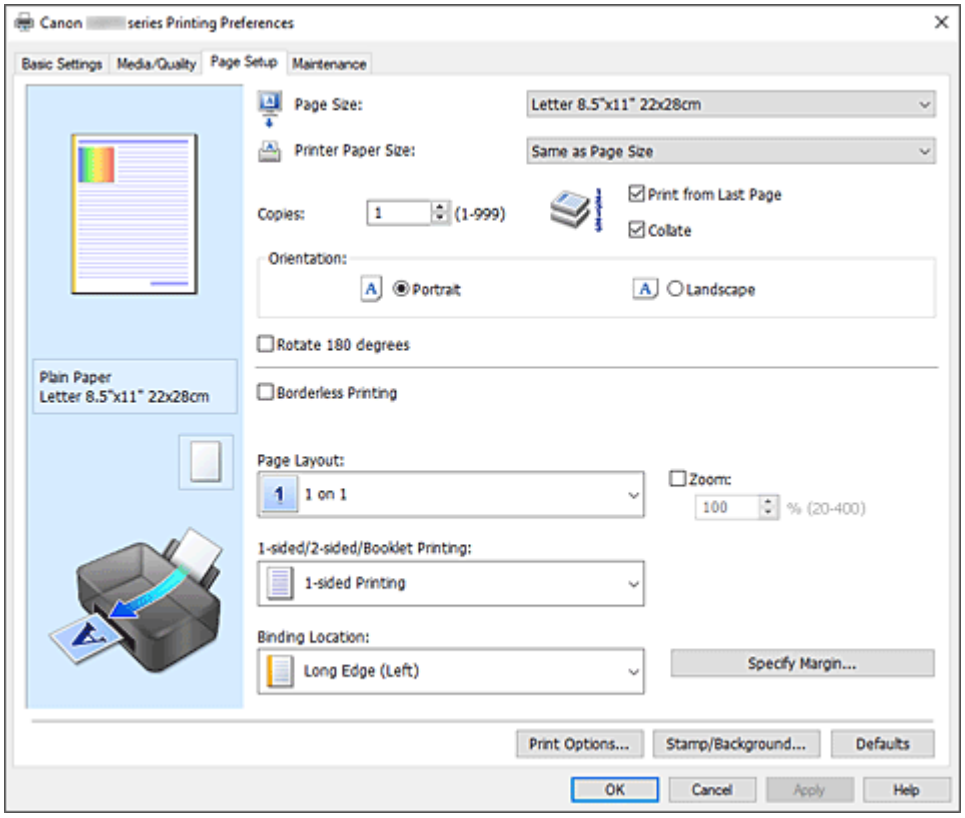

Settings Preview

The paper illustration shows how the original will be laid out on a sheet of paper.
You can check an overall image of the layout.

Page Size

Selects a page size.

Ensure that you select the same page size as you selected within the application.

If you select **Custom...**, the **Custom Paper Size** dialog box opens and allows you to specify any vertical and horizontal dimensions for the paper size.

Printer Paper Size

Selects the size of paper actually loaded into the printer.

The default setting is **Same as Page Size** to perform normal-sized printing.

If you select a paper size that is smaller than the **Page Size**, the document size will be reduced. If you select a paper size that is larger, the document size will be enlarged.

Also if you select **Custom...**, the **Custom Paper Size** dialog box opens and allows you to specify any vertical and horizontal dimensions for the paper size.

Copies

Specifies the number of copies you want to print. You can specify a value from 1 to 999.

Important

- If the application used to create your document has a similar function, specify the number of copies with the application without specifying it here.

Print from Last Page

Check this check box when you want to print from the last page in order. If you do this, you do not need to sort the pages into their correct order after printing.

Uncheck this check box to print your document in normal order, starting from the first page.

Collate

Check this check box to group together the pages of each copy when you want to print multiple copies.

Uncheck this check box when you want to print with all pages of the same page number grouped together.

Important

- When the application software that you used to create the document has the same function, give priority to the printer driver settings. However, if the print results are not acceptable, specify the function settings on the application software. When you specify the number of copies and the printing order with both the application and this printer driver, the number of copies may be multiplied numbers of the two settings or the specified printing order may not be enabled.

Orientation

Selects the printing orientation.

If the application used to create your document has a similar function, select the same orientation that you selected in that application.

Portrait

Prints the document so that its top and bottom positions are unchanged relative to the paper feed direction. This is the default setting.

Landscape

Prints the document by rotating it 90 degrees relative to the paper feed direction.

You can change the rotation direction by going to the **Maintenance** tab, opening the **Custom Settings** dialog box, and then using **Rotate 90 degrees left when orientation is [Landscape]** check box.

To rotate the document 90 degrees to the left when printing, select the **Rotate 90 degrees left when orientation is [Landscape]** check box.

Rotate 180 degrees

Prints the document by rotating it 180 degrees against the paper feed direction.

The width of print area and the amount of extension that are configured in other application software will be reversed vertically and horizontally.

Borderless Printing

Chooses whether you are printing on a full page without any page margins or printing with page margins.

In borderless printing, originals are enlarged to extend slightly off the paper. Thus, printing can be performed without any margins (border).

Use **Amount of Extension** to adjust how much of the document extends off the paper during borderless printing.

Amount of Extension

Adjusts how much of the document extends off the paper during borderless printing.

Moving the slider to the right increases the amount of extension and allows you to perform borderless printing with no problems.

Moving the slider to the left reduces the amount of extension and expands the range of the document to print.

Page Layout

Selects the size of the document you want to print and the type of printing.

1 on 1 to 16 on 1

Multiple pages of document can be printed on one sheet of paper. To change the page order, click **Preferences...**. In the **Page Layout Printing** dialog box that appears, specify **Page Order**.

Poster (1 x 2) to Poster (4 x 4)

This function enables you to enlarge the image data and divide the enlarged data into several pages to be printed.

You can also glue together these sheets of paper to create large printed matter, such as a poster.

Preferences...

Opens the **Poster Printing** dialog box.

Click this button to set details on tiling/poster printing.

Zoom

Specifies an enlargement or reduction ratio for the document you want to print.

1-sided/2-sided/Booklet Printing

1-sided Printing

Select when performing single-sided printing.

2-sided Printing (Manual)

Select when performing duplex printing.

Booklet Printing

The booklet printing function allows you to print data for a booklet. Data is printed on both sides of the paper. This type of printing ensures that pages can be collated properly, in page number order, when the printed sheets are folded and stapled at the center.

Preferences...

Opens the **Booklet Printing** dialog box. Click this button to set details on booklet printing.

Binding Location

Selects the stapling margin position.

The printer analyzes the **Orientation** and **Page Layout** settings, and automatically selects the best stapling margin position. Check **Binding Location**, and select from the list to change it. To specify the width of the binding margin, set it from the **Page Setup** tab.

Specify Margin...

Opens the **Specify Margin** dialog box. You can specify the width of the margin.

Print Options...

Opens the **Print Options** dialog box.

Changes detailed printer driver settings for print data that is sent from applications.

Stamp/Background...

Opens the **Stamp/Background** dialog box.

The **Stamp** function allows you to print a stamp text or a bitmap over or behind document data. It also allows you to print date, time and user name. The **Background** function allows you to print a light illustration behind the document data.

Depending on the environment, **Stamp** and **Background** may not be available.

Defaults

Restores all the settings you have changed to their default values.

Clicking this button restores all the settings on the current screen to their default values (factory settings).

Custom Paper Size dialog box

This dialog box allows you to specify the size (width and height) of the custom paper.

Units

Select the unit for entering a user-defined paper size.

Paper Size

Specifies the **Width** and the **Height** of the custom paper. Measurement is shown according to the units specified in **Units**.

Page Layout Printing dialog box

This dialog box allows you to select the number of document pages to be placed on one sheet of paper, the page order, and whether a page border line is to be printed around each document page.

The settings specified in this dialog box can be confirmed in the settings preview on the printer driver.

Page Order

Specifies the document orientation to be printed on a sheet of paper.

Page Border

Prints a page border line around each document page.

Check this check box to print the page border line.

Poster Printing dialog box

This dialog box allows you to select the size of the image to be printed. You can also make settings for cut lines and paste markers which are convenient for pasting together the pages into a poster.
The settings specified in this dialog box can be confirmed in the settings preview on the printer driver.

Print "Cut/Paste" in margins

Specifies whether to print the words "Cut" and "Paste" in the margins. These words serve as guidelines for pasting together the pages into a poster.
Check this check box to print the words.

Note

- Depending on the environment of the printer driver you are using, this function may not be available.

Print "Cut/Paste" lines in margins

Specifies whether to print cut lines that serve as guidelines for pasting together the pages into a poster.
Check this check box to print the cut lines.

Print page range

Specifies the printing range. Select **All** under normal circumstances.
Select **Pages** to specify a specific page or range.

Note

- If some of the pages have not been printed well, specify the pages that do not need to be printed by clicking them in the settings preview of the **Page Setup** tab. Only the pages shown on the screen will be printed this time.

Booklet Printing dialog box

This dialog box allows you to set how to bind the document as a booklet. Printing only on one side and printing a page border, can also be set in this dialog box.
The settings specified in this dialog box can be confirmed in the settings preview on the printer driver.

Preview Icon

Shows the settings made on the **Booklet Printing** dialog box.
You can check what the document will look like when printed as a booklet.

Margin for stapling

Specifies which side of the booklet is to be stapled.

Insert blank page

Selects whether to print the document on one side or both sides of the booklet.
Check this check box to print the document on one side of the booklet and select the side to be left blank from the list.

Margin

Specifies the width of the stapling margin.
The specified width becomes the stapling margin from the center of the sheet.

Page Border

Prints a page border line around each document page.
Check this check box to print the page border line.

Specify Margin dialog box

This dialog box allows you to specify the margin width for the side to be stapled. If a document does not fit on one page, the document is reduced when printed.

Margin

Specifies the width of the stapling margin.
The width of the side specified by **Binding Location** becomes the stapling margin.

Print Options dialog box

Makes changes to print data that is sent to the printer.

Depending on the environment, this function may not be available.

Disable ICM required from the application software

Disables the ICM function required from the application software.
When an application software uses Windows ICM to print data, unexpected colors may be produced or the printing speed may decrease. If these problems occur, checking this check box may resolve the problems.

Important

- Uncheck this check box under normal circumstances.
- This function does not work when **ICM** is selected for **Color Correction** on the **Matching** tab of the **Manual Color Adjustment** dialog box.

Disable the color profile setting of the application software

Checking this check box disables information in the color profile that was set on the application software.
When the information in the color profile set on the application software is output to the printer driver, the print result may contain unexpected colors. If this happens, checking this check box may resolve the problem.

Important

- Uncheck this check box under normal circumstances.
- Even when this check box is checked, only some of the information in the color profile is disabled, and the color profile can still be used for printing.

Ungroup Papers

Sets the display method of **Media Type**, **Page Size**, and **Printer Paper Size**.
To display the items separately, select the check box.
To display the items as a group, clear the check box.

Do not allow application software to compress print data

Compression of the application software print data is prohibited.
If the print result has missing image data or unintended colors, selecting this check box may improve the condition.

Important

- Uncheck this check box under normal circumstances.

Print after creating print data by page

The print data is created in page units, and printing starts after the processing of one page of print data is complete.

If a printed document contains unintended results such as streaks, selecting this check box may improve the results.

Important

- Uncheck this check box under normal circumstances.

Prevention of Print Data Loss

You can reduce the size of the print data that was created with the application software and then print the data.

Depending on the application software being used, the image data may be cut off or may not be printed properly. In such cases, select **On**. If you will not be using this function, select **Off**.

Important

- When using this function, the print quality may drop depending on the print data.

Unit of Print Data Processing

Selects the processing unit of the print data to be sent to the printer.

Select **Recommended** under normal circumstances.

Important

- A large amount of memory may be used for certain settings.
  Do not change the setting if your computer has a small amount of memory.

Print With

Specify the ink to be used when printing.

Select from **All Colors (Default)** and **Black Only**.

Important

- When the following settings are specified, **Black Only** does not function because the printer uses an ink other than black to print documents.
  - Other than **Plain Paper**, **Envelope**, **Ink Jet Hagaki (A)**, **Hagaki K (A)**, **Hagaki (A)**, or **Hagaki** is selected for **Media Type** on the **Media/Quality** tab
  - A checkmark is added to **Borderless Printing** on the **Page Setup** tab
- Do not detach the print head that is not in use. Printing cannot be performed while either print head is detached.

Stamp/Background dialog box

Depending on the environment, **Stamp** and **Background** may not be available.

The **Stamp/Background** dialog box allows you to print a stamp and/or background over or behind the document pages. In addition to the pre-registered ones, you can register and use your original stamp or background.

Stamp

Stamp printing is a function that prints a stamp over a document.
Check this check box and select a title from the list to print a stamp.

Define Stamp...

Opens the **Stamp Settings** dialog box.
You can check the details of a selected stamp or save a new stamp.

Place stamp over text

Sets how the stamp is to be printed over the document.
Check the **Stamp** check box to enable this.
Check this check box to print a stamp over the printed document page. The printed data may be hidden behind the stamp.
Uncheck this check box to print the document data over the stamp. The printed data will not be hidden behind the stamp. However, the sections of the stamp that are overlapped by the document may be hidden.

Stamp first page only

Selects whether the stamp is to be printed on the first page only or on all pages when the document has two or more pages.
Check the **Stamp** check box to enable this.
Check this check box to print a stamp on the first page only.

Background

Background printing is a function that allows you to print an illustration or a similar object (bitmap) behind the document.
Check this check box to print a background and select a title from the list.

Select Background...

Opens the **Background Settings** dialog box.
You can register a bitmap as a background, and change layout method and intensity of the selected background.

Background first page only

Selects whether to print the background on the first page only or print on all pages when the document has two or more pages.
Check the **Background** check box to enable this.
Check this check box to print a background on the first page only.

Stamp Tab

The Stamp tab allows you to set the text and bitmap file (.bmp) to be used for a stamp.

Preview Window

Shows the status of the stamp configured in each tab.

Stamp Type

Specifies the stamp type.
Select **Text** to create a stamp with characters. Select **Bitmap** to create with a bitmap file. Select **Date/Time/User Name** to display the creation date/time and user name of the printed document.
The setting items in the **Stamp** tab change depending on the selected type.

- For **Text** registration, the characters must already be entered in **Stamp Text**. If necessary, change the **TrueType Font**, **Style**, **Size**, and **Outline** settings. You can select the color of the stamp by clicking **Select Color...**.
- For **Bitmap**, click **Select File...** and select the bitmap file (.bmp) to be used. If necessary, change the settings of the **Size** and **Transparent white area**.
- For **Date/Time/User Name**, the creation date/time and user name of the printed object are displayed in **Stamp Text**. If necessary, change the settings of **TrueType Font**, **Style**, **Size**, and **Outline**. You can select the color of the stamp by clicking **Select Color...**.

When **Stamp Type** is **Text** or **Date/Time/User Name**

Stamp Text

Specifies the stamp text string.
Up to 64 characters can be entered.
For **Date/Time/User Name**, the creation date/time and user name of the printed object are displayed in **Stamp Text**.

TrueType Font

Selects the font for the stamp text string.

Style

Selects the font style for the stamp text string.

Size

Selects the font size for the stamp text string.

Outline

Selects a frame that encloses the stamp text string.
If a large font size is selected for **Size**, characters may extend outside of the stamp border.

Color/Select Color...

Shows the current color for the stamp.
To select a different color, click **Select Color...** to open the **Color** dialog box, and select or create a color you wish to use as a stamp.

When **Stamp Type** is **Bitmap**

File

Specifies the name of the bitmap file to be used as the stamp.

Select File...

Opens the dialog box to open a file.
Click this button to select a bitmap file to be used as a stamp.

Size

Adjusts the size of the bitmap file to be used as a stamp.
Moving the slider to the right increases the size, moving the slider to the left decreases the size.

Transparent white area

Specifies whether to make white-filled areas of the bitmap transparent.
Check this check box to make white-filled areas of the bitmap transparent.

Note

- Click **Defaults** to set **Stamp Type** to text, **Stamp Text** to blank, **TrueType Font** to Arial, **Style** to Regular, **Size** to 36 points, **Outline** unchecked, and **Color** to gray with the RGB values (192, 192, 192).

Placement Tab

The Placement tab allows you to set the position where the stamp is to be printed.

Preview Window

Shows the status of the stamp configured in each tab.

Position

Specifies the stamp position on the page.
Selecting **Custom** from the list allows you to enter values for the **X-Position** and **Y-Position** coordinates directly.
You can also change the stamp position by dragging the stamp in the preview window.

Rotation

Specifies the angle of rotation for the stamp. The angle can be set by entering the number of degrees.
Negative values rotate the stamp clockwise.

Note

- **Rotation** is enabled only when **Text** or **Date/Time/User Name** is selected for **Stamp Type** on the **Stamp** tab.

Note

- Click **Defaults** to set the stamp position to **Center** and the rotation to "0."

Save settings Tab

The **Save settings** tab allows you to register a new stamp or delete an unnecessary stamp.

Title

Enter the title to save the stamp you created.
Up to 64 characters can be entered.

Note

- Spaces, tabs, and returns cannot be entered at the beginning or end of a title.

Stamps

Shows a list of saved stamp titles.
Specify a title to display the corresponding stamp in **Title**.

Save/Save overwrite

Saves the stamp.
Enter a title in **Title**, and then click this button.

Delete

Deletes an unnecessary stamp.
Specify the title of an unnecessary stamp from the **Stamps** list, and click this button.

Background Tab

The Background tab allows you to select a bitmap file (.bmp) to be used as a background or determine how to print the selected background.

Preview Window

Shows the status of the bitmap set on the **Background** tab.

File

Specifies the name of the bitmap file to be used as the background.

Select File...

Opens the dialog box to open a file.
Click this button to select a bitmap file (.bmp) to be used as the background.

Layout Method

Specifies how the background image is to be placed on the paper.
When **Custom** is selected, you can set coordinates for **X-Position** and **Y-Position**.
You can also change the background position by dragging the image in the preview window.

Intensity

Adjusts the intensity of the bitmap to be used as a background.
Moving the slider to the right increases the intensity, and moving the slider to the left decreases the intensity. To print the background at the original bitmap intensity, move the slider to the rightmost position.

Note

- Depending on the environment, this function may not be available.
- Click **Defaults** to set **File** to blank, **Layout Method** to **Fill page**, and the **Intensity** slider to the middle.

Save settings Tab

The **Save settings** tab allows you to register a new background or delete an unnecessary background.

Title

Enter the title to save the background image you specified.
Up to 64 characters can be entered.

Note

- Spaces, tabs, and returns cannot be entered at the beginning or end of a title.

Backgrounds

Shows a list of registered background titles.
Specify a title to display the corresponding background in **Title**.

Save/Save overwrite

Saves the image data as a background.
After inserting the **Title**, click this button.

Delete

Deletes an unnecessary background.

Specify the title of an unnecessary background from the **Backgrounds** list, and then click this button.

Setting the Number of Copies and Printing Order

You can also set the number of copies on the **Basic Settings** tab.

1. Open the printer driver setup window

2. Specify the number of copies to be printed

   For **Copies** on the **Page Setup** tab, specify the number of copies to be printed.

3. Specify the print order

   Check the **Print from Last Page** check box when you want to print from the last page in order, and uncheck the check box when you want to print from the first page.
   Check the **Collate** check box when you are printing multiple copies of a document and want to print out all pages in each copy together. Uncheck this check box when you want to print all pages with the same page number together.

   - **Print from Last Page**: ☑ /**Collate**: ☑

     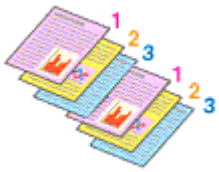

   - **Print from Last Page**: ☐ /**Collate**: ☑

     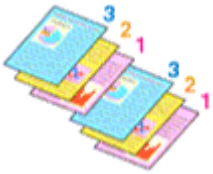

   - **Print from Last Page**: ☑ /**Collate**: ☐

     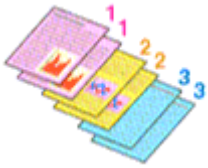

   - **Print from Last Page**: ☐ /**Collate**: ☐

4. Click **OK**

   When you perform print, the specified number of copies will be printed with the specified printing order.

Important

- When the application software that you used to create the document has the same function, specify the settings on the printer driver. However, if the print results are not acceptable, specify the function settings on the application software. When you specify the number of copies and the printing order with both the application software and this printer driver, the number of copies may be multiplied numbers of the two settings or the specified printing order may not be enabled.

Note

- By setting both **Print from Last Page** and **Collate**, you can perform printing so that papers are collated one by one starting from the last page.

Perform Borderless Printing

The borderless printing function allows you to print data without any margin by enlarging the data so that it extends slightly off the paper. In standard printing, margins are created around the document area. However, in borderless printing function, these margins are not created. When you want to print data such as a photo without providing any margin around it, set borderless printing.

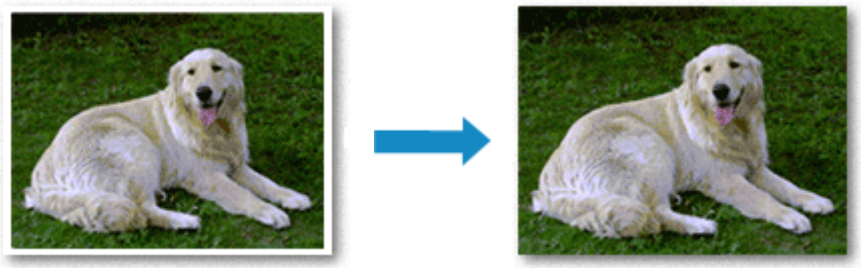

You can also set borderless printing on the **Basic Settings** Tab.

Note

- You can also set **Amount of extension** on the operation panel of the printer, but the settings on the printer driver will be prioritized.

Setting Borderless Printing

1. Open the printer driver setup window

2. Set borderless printing

   Add a checkmark to **Borderless Printing** on the **Page Setup** tab.

   Click **OK** when the confirmation message appears.
   When a message prompting you to change the media type appears, select a media type from the list and click **OK**.

3. Check the paper size

   Check the **Page Size** list. When you want to change it, select another page size from the list. The list displays only sizes that can be used for borderless printing.

4. Adjust the amount of extension from the paper

   If necessary, adjust the amount of extension using the **Amount of Extension** slider.
   Moving the slider to the right increases the amount extending off the paper, and moving the slider to the left decreases the amount.
   It is recommended to set the slider at the second position from the right for most cases.

Important

- When the **Amount of Extension** slider is set to the rightmost position, the back side of the paper may become smudged.

5. Click **OK**

   When you perform print, the data is printed without any margins on the paper.

Important

- When a page size that cannot be used for borderless printing is selected, the size is automatically changed to the valid page sizes for borderless printing.
- Depending on the type of the media used during borderless printing, the print quality may deteriorate at the top and bottom of the sheet or stains may form.
- When the ratio of the height to the width differs from the image data, a portion of the image may not be printed depending on the size of the media used.
  In this case, crop the image data with an application software according to the paper size.

Note

- When **Plain Paper** is selected for **Media Type** on the **Media/Quality** tab, borderless printing is not recommended. Therefore, the message for media selection appears.
  When you are using plain paper for test printing, select **Plain Paper**, and click **OK**.

Expanding the Range of the Document to Print

Setting a large amount of extension allows you to perform borderless printing with no problems. However, the portion of the document extending off the paper range will not be printed and for this reason, the subjects around the perimeter of a photo may not be printed.

When you are not satisfied with the result of borderless printing, reduce the amount of extension. The extension amount decreases as the **Amount of Extension** slider is moved to the left.

Important

- When the amount of extension is decreased, an unexpected margin may be produced on the print, depending on the size of the paper.

Note

- When the **Amount of Extension** slider is set to the leftmost position, image data will be printed in the full size. If you set this when printing the address side of a postcard, the postal code of the sender is printed in the correct position.
- When **Preview before printing** is checked on the **Media/Quality** tab, you can confirm whether there will be no margin before printing.

Page Layout Printing

The page layout printing function allows you to print more than one page image on a single sheet of paper.

1. Open the printer driver setup window

2. Set page layout printing

   Select a page layout number from **1 on 1** to **16 on 1** from the **Page Layout** list on the **Page Setup** tab.
   The current settings are displayed in the settings preview on the left side of the printer driver.

3. Select the print paper size

   Select the size of the paper loaded in the printer from the **Printer Paper Size** list.

4. Set the number of pages to be printed on one sheet and the page order

   If necessary, click **Preferences...**, specify the following settings in the **Page Layout Printing** dialog box, and click **OK**.

   Page Order
   To change the page arrangement order, select a placement method from the list.

   Page Border
   To print a page border around each document page, check this check box.

5. Complete the setup

   Click **OK** on the **Page Setup** tab.
   When you perform print, the specified number of pages will be arranged on each sheet of paper in the specified order.

Duplex Printing

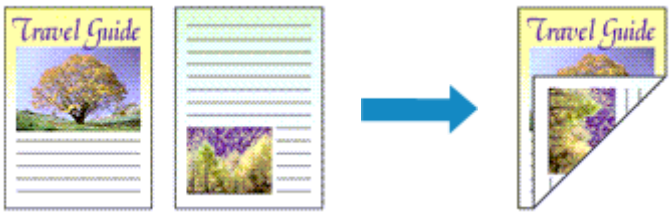

You can also set duplex printing in the **Media/Quality** tab.

1. Open the printer driver setup window

2. Set duplex printing

   Select **2-sided Printing (Manual)** from **1-sided/2-sided/Booklet Printing** on the **Page Setup** tab.

3. Select the layout

   Select the layout you want to use from the **Page Layout** list.

4. Specify the side to be stapled

   The best **Binding Location** is selected automatically from the **Orientation** and **Page Layout** settings.
   To change the setting, select another stapling side from the **Binding Location** list.

5. Set the margin width

   If necessary, click **Specify Margin...** and set the margin width, and then click **OK**.

6. Complete the setup

   Click **OK** on the **Page Setup** tab.
   When you perform print, the document is first printed on one side of a sheet of paper. After one side is printed, reload the paper correctly according to the message.
   Press the **OK** button on the printer to print the opposite side.

Note

- If the back side of the paper becomes smudged during duplex printing, perform **Bottom Plate Cleaning** in the Canon IJ Printer Assistant Tool.

Related Topics

- Cleaning Inside the Printer
- Changing the Printer Operation Mode

Overview of the Printer Driver

- **Canon IJ Printer Driver**
  - Opening Printer Driver's Setup Screen
- **Canon IJ Status Monitor**
- **Instructions for Use (Printer Driver)**

Canon IJ Printer Driver

The Canon IJ printer driver (simply called printer driver below) is software that you install onto your computer so that it can communicate with the printer.

The printer driver converts the print data created by your application software into data that your printer can understand, and sends the converted data to the printer.

Because different models support different print data formats, you need a printer driver for the specific model you are using.

Installing the Printer Driver

To install the printer driver, install the driver from the Setup CD-ROM or our website.

Specifying the Printer Driver

To specify the printer driver, open the **Print** dialog box of the application software you are using, and select "Canon XXX" (where "XXX" is your model name).

Displaying the Manual from the Printer Driver

To display the description of a setup tab from the printer driver's setup screen, click **Help** on that tab.

Related Topic

➡ Opening Printer Driver's Setup Screen

Opening Printer Driver's Setup Screen

You can display the printer driver's setup screen from your application software or by clicking the printer icon.

Displaying the Printer Driver's Setup Screen from Your Application Software

Perform this procedure to set up the print settings during printing.

1. Select print command from application software

   The **Print** command can generally be found in the **File** menu.

2. Select your printer model, and click **Preferences** (or **Properties**)

   The printer driver's setup screen appears.

Note

- Depending on the application software you are using, the command and menu names, and the number of steps may vary. For details, refer to the operating instructions of your application software.

Displaying the Printer Driver's Setup Screen by Clicking the Printer Icon

From the setup screen you can perform printer maintenance operations such as print head cleaning, or set print settings to be shared by all application software.

1. Select **Control Panel** -> **Hardware and Sound** -> **Devices and Printers**

2. Right-click the icon of your model. When the menu appears, select **Printing preferences**

   The printer driver's setup screen appears.

Important

- Opening the printer driver setup window through **Printer properties** displays such tabs regarding the Windows functions as the **Ports** (or **Advanced**) tab. Those tabs do not appear when opening through **Printing preferences** or application software. For tabs regarding Windows functions, refer to the user's manual for the Windows.

Canon IJ Status Monitor

The Canon IJ Status Monitor displays the printer status and the printing progress. The printer status is shown by the icons and messages in the status monitor.

Launching the Canon IJ Status Monitor

The Canon IJ Status Monitor launches automatically when print data is sent to the printer. When launched, the Canon IJ Status Monitor appears as a button on the task bar.

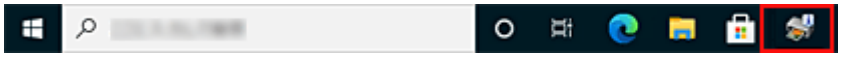

Click the button of the status monitor displayed on the task bar. The Canon IJ Status Monitor appears.

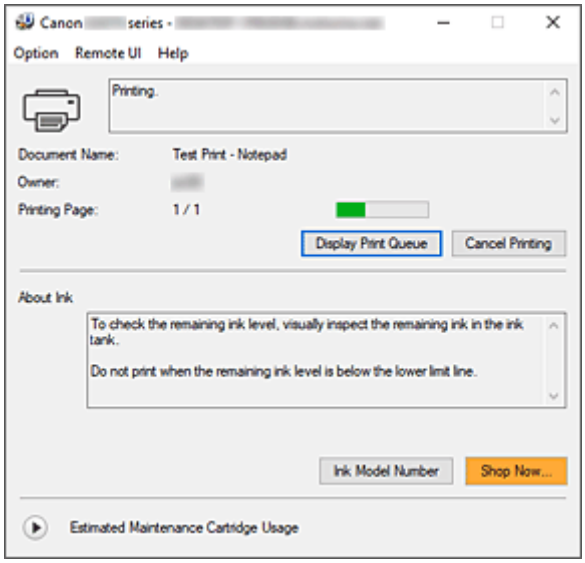

Note

- To open the Canon IJ Status Monitor when the printer is not printing, open the printer driver setup window and click **View Printer Status** on the **Maintenance** tab.
- The information displayed on the Canon IJ Status Monitor may differ depending on the country or region where you are using your printer.

When Errors Occur

The Canon IJ Status Monitor is automatically displayed if an error occurs (e.g., if the printer runs out of paper or if the ink is low).

In such cases, take the appropriate action as described.

Related Topic

➡ Canon IJ Status Monitor Description

Instructions for Use (Printer Driver)

This printer driver is subject to the following restrictions. Keep the following points in mind when using the printer driver.

Restrictions on the Printer Driver

- With some applications, the **Copies** setting in the **Page Setup** tab of the printer driver may not be enabled.
  In this case, use the copies setting in the **Print** dialog box of the application software.
- If the selected **Language** in the **About** dialog box of the **Maintenance** tab does not match the operating system interface language, the printer driver setup window may not be displayed properly.
- Do not change the **Advanced** tab items of the printer properties. If you change any of the items, you will not be able to use the following functions correctly.
  Also, if **Print to file** is selected in the **Print** dialog box of the application software and with applications that prohibit EMF spooling, the following functions will not operate.
  - **Preview before printing** on the **Media/Quality** tab
  - **Prevention of Print Data Loss** in the **Print Options** dialog box on the **Page Setup** tab
  - **Booklet Printing** in **1-sided/2-sided/Booklet Printing** on the **Page Setup** tab
  - **Print from Last Page**, **Collate**, **Specify Margin...**, and **Stamp/Background...** on the **Page Setup** tab
- Since the resolution in the preview display differs from the printing resolution, text and lines in the preview display may appear different from the actual print result.
- With some applications, the printing is divided into multiple print jobs.
  To cancel printing, delete all divided print jobs.
- If image data is not printed correctly, display the **Print Options** dialog box from the **Page Setup** tab and change the setting of **Disable ICM required from the application software**. This may solve the problem.
- If you are using a model that has a card slot, the card slot of the printer may become inaccessible. In such cases, restart the printer or turn it off and reconnect the USB cable.

Points to Note About Applications with Restrictions

- There are following restrictions in Microsoft Word (Microsoft Corporation).
  - When Microsoft Word has the same printing functions as the printer driver, use Word to specify them.
  - When a setting from **2 on 1** to **16 on 1** or **Zoom** is used for **Page Layout** on the **Page Setup** tab of the printer driver, the document may not print normally in certain versions of Word.
  - When **Page Size** in Word is set to "XXX Enlarge/Reduce," the document may not print normally in certain versions of Word.
    If this happens, follow the procedure below.
    1. Open Word's **Print** dialog box.
    2. Open the printer driver setup window, and on the **Page Setup** tab, set **Page Size** to the same paper size that you specified in Word.
    3. Set **Booklet Printing** in **Page Layout** or **1-sided/2-sided/Booklet Printing** according to your requirements.

4. Click OK to close the window.
5. Without starting printing, close the **Print** dialog box.
6. Open Word's **Print** dialog box again.
7. Open the printer driver setup window and click **OK**.
8. Start printing.

- If bitmap printing is enabled in Adobe Illustrator (Adobe Incorporated), printing may take time or some data may not be printed. Print after unchecking the **Bitmap Printing** check box in the **Print** dialog box.

Maintenance Tab Description

The **Maintenance** tab allows you to start the Canon IJ Printer Assistant Tool or check the status of the printer.

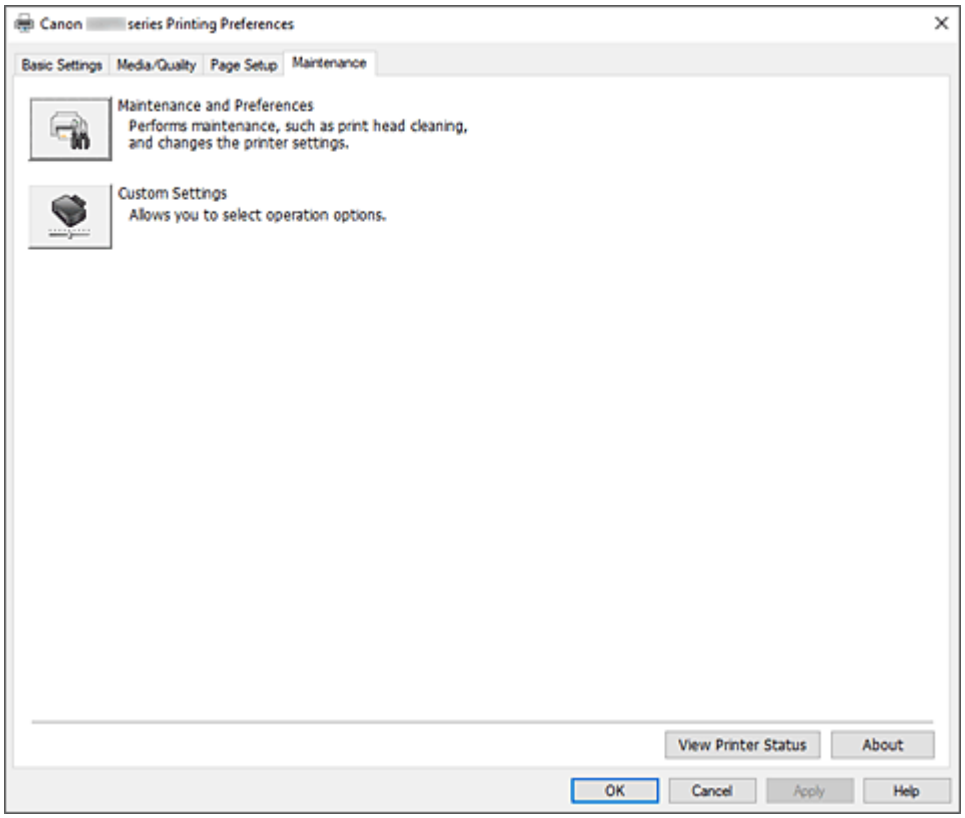

Maintenance and Preferences

Canon IJ Printer Assistant Tool is started.

You can perform printer maintenance or change the settings of the printer.

Custom Settings

Opens the **Custom Settings** dialog box.

Perform this function to change the settings of this printer.

Note

- If the printer is off or if communication between the printer and the computer is disabled, an error message may appear because the computer cannot collect the printer status.
  If this happens, click **OK** to display the most recent settings specified on your computer.

View Printer Status

Starts the Canon IJ Status Monitor.

Perform this function when you want to check the printer status and how a print job is proceeding.

About

Opens the **About** dialog box.
The version of the printer driver, plus a copyright notice, can be checked.
In addition, the language to be used can be switched.

Custom Settings dialog box

When you click **Custom Settings**, the **Custom Settings** dialog box is displayed.
If necessary, switch between various modes of printer operation.

Rotate 90 degrees left when orientation is [Landscape]

On the **Page Setup** tab, you can change the rotation direction of the **Landscape** in the **Orientation**.
To rotate the print data 90 degrees to the left during printing, check this check box.

Important

- Do not change this setting while the print job is displayed in the print wait list. Otherwise, characters may be omitted or the layout may become corrupt.

Note

- If **Envelope Com 10**, **Envelope DL**, **Yougata 4 4.13"x9.25"**, **Yougata 6 3.86"x7.48"**, **Envelope C5**, or **Envelope Monarch 3.88"x7.5" 98.4x190.5mm** is selected for **Page Size** on the **Page Setup** tab, the printer rotates the paper 90 degrees to the left to print, regardless of the **Rotate 90 degrees left when orientation is [Landscape]** setting.

Do not detect mismatched paper settings when printing from a computer

When you print documents from your computer, the paper settings in the printer driver and the paper information registered on the printer do not match, this setting disables the message display and allows you to continue printing.
To enable detection of paper setting mismatches, uncheck this check box.

About dialog box

When you click **About**, the **About** dialog box is displayed.
This dialog box displays the version, copyright, and module list of the printer driver. You can select the language to be used and switch the language displayed in the setup window.

Modules

Lists the printer driver modules.

Language

Specifies the language you wish to use in the printer driver setup window.

Important

- If the font for displaying the language of your choice is not installed in your system, the characters will be garbled.

Allow Google Analytics to send information

To stop sending information, uncheck this check box.

The check box appears only if a user with administrator privileges is logged on. If information is not provided, the check box will not appear.

Canon IJ Status Monitor Description

The Canon IJ Status Monitor displays the printer status and the printing progress. The printer status is shown by the icons and messages in the status monitor.

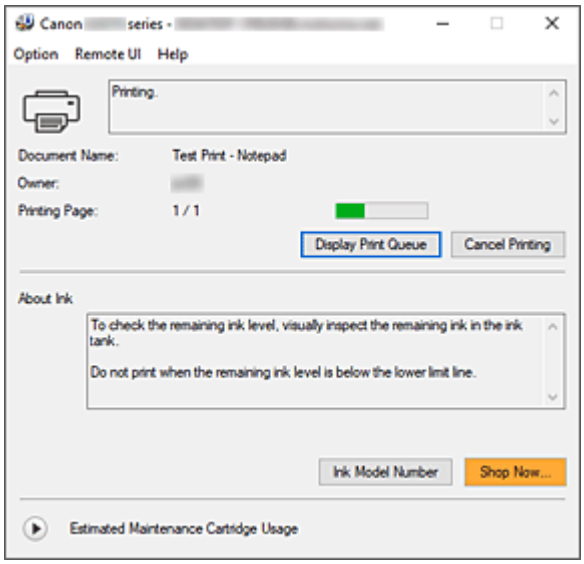

Features of the Canon IJ Status Monitor

The Canon IJ Status Monitor has the following functions:

Onscreen display of printer status

The status monitor displays the printer status in real-time.
You can check the progress of each document to be printed (print job).

Display of error content and correction procedure

The status monitor displays information on any errors that occur on the printer.
You can then immediately check what sort of action to perform.

Overview of the Canon IJ Status Monitor

The Canon IJ Status Monitor displays icons and messages related to printer status and ink.
During printing, you can check information about the document being printed and the print progress.
If an error occurs, the status monitor displays the error content and instructions on how to correct the error. Follow the message instructions.

Printer

Canon IJ Status Monitor shows an icon when a warning or error occurs to the printer.

: There is a warning.

: There has been an operator error.

: There is a notice about something other than a warning or an error.

: There has been an error which requires a service.

Document Name

Name of the document being printed.

Owner

Owner's name of the document being printed.

Printing Page

Page number of current page and the total page count.

Display Print Queue

The print queue, which controls the current document and documents waiting to be printed.

Cancel Printing

Cancels printing.

About Ink

Displays messages about ink.

Ink Model Number

You can look up the correct ink model number for your printer.

Estimated Maintenance Cartridge Usage

Displays icons to report that the available space in the maintenance cartridge is low or the cartridge is full.

Click (the disclosure triangle) to display a pictorial representation of the estimated usage amount in the maintenance cartridge.

Option Menu

If a printer message appears, select **Enable Status Monitor** to start the Canon IJ Status Monitor.

Select **Enable Status Monitor** to use the following commands:

Always Display Current Job

Displays the Canon IJ Status Monitor whenever a document is being printed.

Always Display on Top

Displays the Canon IJ Status Monitor in front of other windows.

Display Guide Message

Displays guide messages for complicated paper setting operations.

Envelope Printing

Displays a guide message when envelope printing starts.

To hide this guide message, select the **Do not show this message again** check box.

To display the guide message again, open the **Option** menu, select **Display Guide Message**, click **Envelope Printing**, and enable this setting.

Display Warning Automatically

When a Maintenance Cartridge Warning Occurs

When a maintenance cartridge remaining space warning occurs, the Canon IJ status monitor starts automatically and appears in front of all other windows.

Start when Windows is Started

Automatically starts the Canon IJ Status Monitor when Windows is started.

Remote UI menu

You are able to open the printer's Remote User Interface.
You are able to check the printer status and run maintenance functions on the printer when connected to and using it through a network.

Note

- When the printer is being used via USB connection **Remote UI** will not display.

Printer Information

Allows you check detailed information, such as the printer status, the print progress, and remaining ink levels.

Maintenance

Allows you to run printer maintenance and change printer settings.

Download Security Certificate

Displays the **For secure communication** window.
This window allows you to download the route certificate, register it to the browser, and disable warning displays.

Help Menu

Select this menu to display Help information for the Canon IJ Status Monitor including version and copyright information.

Related Topic

➡ Canon IJ Status Monitor

Updating the Driver

Drivers include a printer driver and MP Drivers. The MP Drivers include a printer driver, ScanGear (scanner driver), and fax driver.
By updating the Driver to the latest version of the Driver, unresolved problems may be solved.

Important

- Check the following if you want to install or delete drivers.
  - Log on as a user who has the administrator account.
  - Terminate all running applications.

- Installing the Driver
- Deleting the Unnecessary Driver

Installing the Driver

1. Turn on the printer

2. Start the installer

   Double-click the icon of the downloaded file.
   The installation program starts.

3. Install the driver

   Take the appropriate action as described on the screen.

4. Complete the installation

   Click **Exit**.

   Depending on the environment you are using, a message prompting you to restart the computer may be displayed. To complete the installation properly, restart the computer.

Important

- You can download the driver for free, but any Internet access charges incurred are your responsibility.

Deleting the Unnecessary Driver

The printer driver which you no longer use can be deleted.

1. Start the uninstaller

   Select **Control Panel** -> **Programs** -> **Programs and Features**.
   From the program list, select "Canon XXX MP Drivers" (where "XXX" is your model name) and then click Uninstall.

   The confirmation window for uninstalling the model appears.

2. Perform the uninstaller

Click **Start**. When the confirmation message appears, click **Yes**.
When all the files have been deleted, click **Complete**.

The deletion of the Driver is complete.

Printing from Application Software (macOS AirPrint)

- Printing Basic
- Perform Borderless Printing
- Printing on Postcards
- Adding Printer
- How to Open Printer Settings Screen
- Displaying the Printing Status Screen
- Deleting the Undesired Print Job
- Removing Printer That Is No Longer Required from List of Printers

Printing

This printer is compatible with the macOS standard printing system (AirPrint).
You can start printing right away after connecting this printer to your Mac without installing any special software.

Checking Your Environment

First, check your environment.

- AirPrint Operation Environment
  Mac running the latest version of OS
- Requirement
  The Mac and the printer must be connected by one of the following methods:
  - Connected to the same network over a **LAN**
  - Connected directly without wireless router (Direct Connection)
  - Connected by USB

Print from a Mac

1. Check that printer is turned on

   Note

   - If **Auto power on** is enabled, printer automatically turns itself on when receiving a print job.

2. Load paper in printer

3. Select paper size and paper type from printer

   Register the set paper size and paper type on the printer operation panel.
   For instructions, see "Paper Settings."

4. Start printing from your application software

   The Print dialog opens.

5. Select printer

   Select your model from the **Printer** list in the Print dialog.

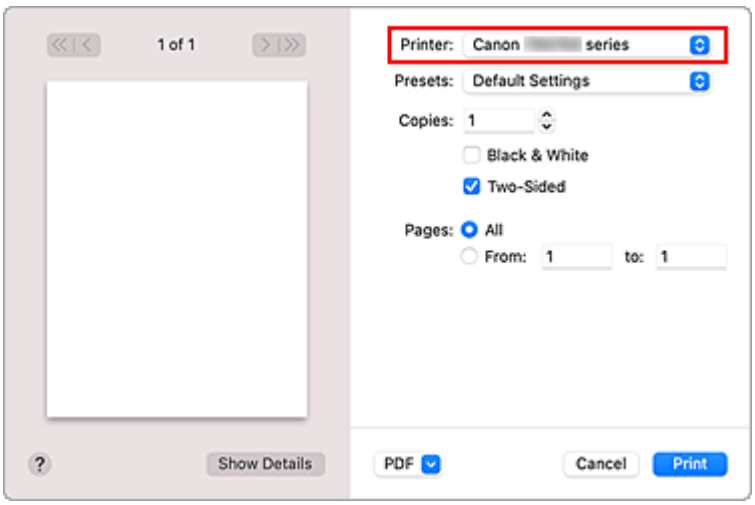

Note

- Click **Show Details** to switch the setup window to the detailed display.

6. Check print settings

Set items such as **Paper Size** to the appropriate size, as well as **Media Type** from **Media & Quality** of the pop-up menu.

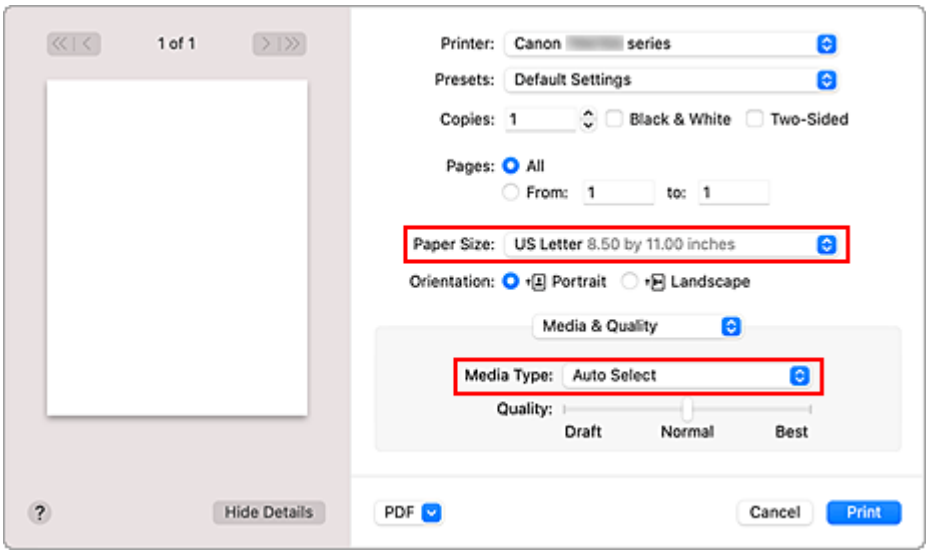

Important

- An error may occur if the paper size set in the print dialog is different from the paper size registered on the printer. Select the correct items on the print dialog and the printer that correspond to the paper being printed.

Note

- Use the Print dialog to set general print settings such as the layout and the print sequence. For information about print settings, refer to macOS help.

7. Click **Print**

The printer prints according to the specified settings.

Important

- If you are performing large-format printing, make sure that there is plenty of remaining ink.
- If you set a custom paper size in **Paper Size** and set it to a length longer than the specified length, the data will be printed with the "Media Type: Plain Paper, Print Quality: Standard" setting.

Note

- It can take the Wi-Fi a few minutes to get connected after the printer turns on. Print after checking that the printer is connected to the network.
- You cannot print if Bonjour settings of printer are disabled. Check **LAN** settings of printer and enable Bonjour settings.
- Refer to "Cannot Print Using AirPrint" for printing problems.
- The display of the settings screen may differ depending on the application software you are using.

Printing of Envelopes

For printing on the envelope from Mac, refer to the following.

Print result image	Orientation of print data	Orientation of loading envelope
	The print data is rotated by 180 degrees against the print result image.	Load the envelope in vertically with the address side facing up so that the folded flap of the envelope will be faced down on the right side.

Perform Borderless Printing

The borderless printing function allows you to print data without any margin by enlarging the data so that it extends slightly off the paper. In standard printing, margins are created around the document area. However, in borderless printing function, these margins are not created. When you want to print data such as a photo without providing any margin around it, set borderless printing.

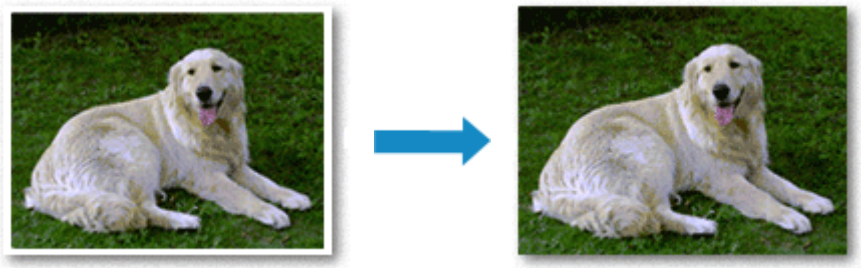

The procedure for performing borderless printing is as follows:

Setting Borderless Printing

1. Set the **Amount of extension** on the printer operation panel

   For information on how to set the amount of extension, see "Print settings."

   Important

   - When the **Extended amount: Large** is set, the back side of the paper may become smudged.

2. Select sheet size for borderless printing

   Select **XXX Borderless** for **Paper Size** from the print dialog.

3. Click **Print**

   When you perform print, the data is printed without any margins on the paper.

Important

- Borderless printing only supports specific paper sizes. Make sure to select a paper size with the wording "Borderless" from the **Paper Size**.
- Print quality may deteriorate or the sheet may be stained at the top and bottom depending on the type of paper used.
- When the ratio of the height to the width differs from the image data, a portion of the image may not be printed depending on the size of the media used.
  In this case, crop the image data with an application software according to the paper size.
- When scaled printing or page layout printing is enabled, you cannot perform borderless printing.

Note

- The use of borderless printing is not recommended if **Plain Paper** is selected for **Media Type** in **Media & Quality**.

Expanding the Range of the Document to Print

Setting a large amount of extension allows you to perform borderless printing with no problems. However, the portion of the document extending off the paper range will not be printed and for this reason, the subjects around the perimeter of a photo may not be printed.

If you are not satisfied with the borderless printing results, reduce the amount of extension in printer operation panel.

Important

- When the amount of extension is decreased, an unexpected margin may be produced on the print, depending on the size of the paper.

Note

- When the **Amount: Minimum** is set, image data will be printed in the full size. If you set this when printing the address side of a postcard, the postal code of the sender is printed in the correct position.

Printing on Postcards

This section describes the procedure for printing on postcards.

1. Load postcards in printer

2. Select paper size and paper type from the printer

   Register **Hagaki (size)** for paper size from the printer operation panel.
   Also, register **IJ Hagaki**, **Hagaki K**, or **Hagaki (type)** for paper type, according to your purpose. When you print on the address side, register **Hagaki (type)**.

3. Select **Paper Size** and **Media Type** from the print dialog

   Select **Postcard** or **Postcard Borderless** for **Paper Size** from the print dialog. When you print on the address side, select **Postcard**.
   Select the Hagaki you want to use for **Media Type** from the print dialog.

   Important

   - This printer cannot print on postcards that have photos or stickers attached.
   - You will get cleaner printing if you print the message side first and then print the address side.

4. Click **Print**

   The printer prints according to the specified settings.

Adding Printer

This section describes the procedure for adding a printer to your Mac.

To re-add a printer that was deleted, open **System Preferences** -> **Printers & Scanners**, click **+** next to the printer list, and then perform the procedure described below.

If your printer is connected via USB, and you connect the USB cable to a Mac, the printer is automatically added. The below procedure is not necessary in this case.

1. Check whether **Default** is selected in the displayed dialog

   Note

   - It may take a little time for your printer to appear.

2. Select the printer

   Select the printer listed as **Bonjour Multifunction**.

   Note

   - Check the following if printer does not appear.
     - Printer is on
     - Firewall function of the security software is off
     - Printer is either connected to the wireless router or directly connected to the PC (Direct Connection)

3. Select your printer or **Secure AirPrint** from **Use**

4. Click **Add**

   The printer is added to your Mac.

How to Open Printer Settings Screen

The settings screen of the printer can be displayed from your application software.

Opening the Page Setup Dialog

Use this procedure to set the page (paper) settings before printing.

1. Select **Page Setup...** from the **File** menu of the application software

   The Page Setup dialog opens.

Opening the Print Dialog

Use this procedure to set the print settings before printing.

1. Select **Print...** from the **File** menu of the application software

   The Print dialog opens.

Displaying the Printing Status Screen

Check the print progress according to the following procedure:

1. Launch the printing status screen

   - If the print data has been sent to the printer
     The printing status screen opens automatically. To display the printing status screen, click the printer icon displayed on the Dock.
   - If the print data has not been sent to the printer
     Open **System Preferences**, and select **Printers & Scanners**.
     To display the printing status screen, select your printer model from the printer list, and then click **Open Print Queue...**.

2. Check the printing status

   You can check the name of the file being printed or ready for being printed.

   Deletes the specified print job.

   Stops printing the specified document.

   Resumes printing the specified document.

   Stops printing all documents.

   Displayed only when printing of all documents is being stopped, and resumes printing all documents.

Important

- If an error occurs, an error message will appear on the printing progress confirmation screen.
- The content of the error message may differ depending on the OS version.
- The printer part names in the error message may differ from what is listed in this manual.
- If the content of the error message is difficult to understand, check the error message displayed on the printer operation panel.

Deleting the Undesired Print Job

If the printer does not start printing, canceled or failed print job data may be remaining.
Delete unnecessary print jobs from the print status check screen.

1. Open **System Preferences**, and select **Printers & Scanners**

2. Select your model, and then click **Open Print Queue...**

   The print status check screen appears.

3. Select the unnecessary print job and click (Delete)

   The selected print jobs will be deleted.

Removing Printer That Is No Longer Required from List of Printers

The printer that is no longer in use can be removed from the list of printers.
Before removing the printer, remove the cable connecting the printer and PC.

You cannot remove the printer if you are not logged on as the administrator. For information about an administrative user, see **Users & Groups** from **System Preferences**.

1. Open **System Preferences**, and select **Printers & Scanners**

2. Delete printer from list of printers

   Select the printer you wish to remove from the list of printers and click **-**.

   Click **Delete Printer** when the confirmation message appears.

Printing Using Canon Application Software

- **Easy-PhotoPrint Editor Guide**

Printing from Smartphone/Tablet

- **Printing from iPhone/iPad/iPod touch (iOS)**
- **Printing from Smartphone/Tablet (Android)**

Paper Settings

By registering the paper size and the media type, the message is displayed before printing starts when the paper size or the media type of the loaded paper differs from the paper settings.

When you loading paper

The screen to register the rear tray paper information is displayed.

If the page size and the media type on the LCD matches the size of the paper loaded in the rear tray, select **OK**.

If not, select **Change** to change the setting in accordance with the size and type of the loaded paper.

Note

- See Check paper replacement when you want to hide the screen for confirming the setting of paper.

Note

- For more on the proper combination of paper settings you can specify by the printer driver (Windows) or on the LCD:
  - ➡ Paper Settings on the Printer Driver and the Printer (Media Type)
  - ➡ Paper Settings on the Printer Driver and the Printer (Paper Size)

When the paper settings for printing/copying are different from the paper information registered to the printer

Ex:

- Paper settings for printing/copying: A5
- Paper information registered to the printer: A4

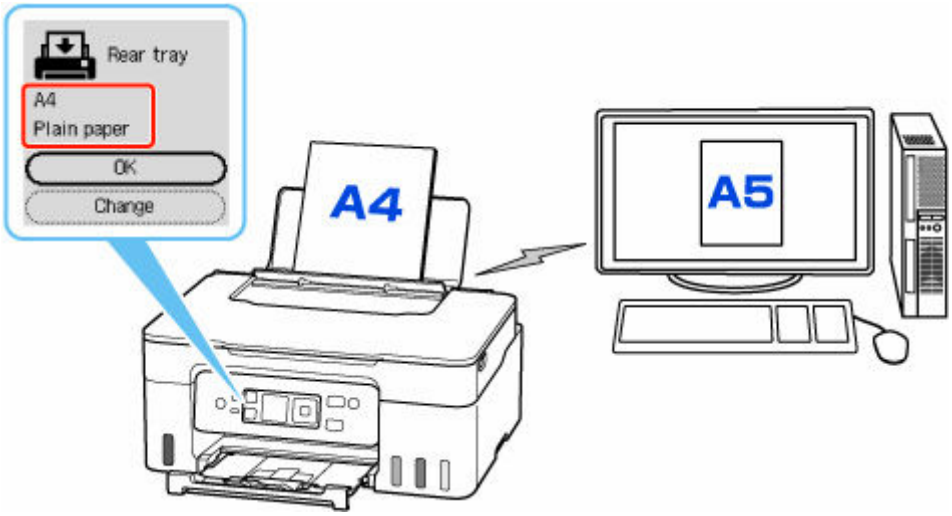

When you start printing/copying, a message is displayed.

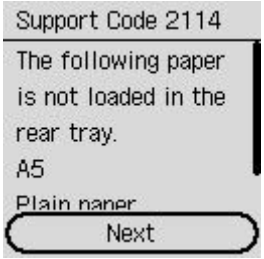

Check the message and select **Next**, and then choose one of the following.

Print on set paper

Select if you want to print/copy on the paper loaded without changing the paper settings.

For example, when the paper setting for printing/copying is A5 and the paper information registered to the printer is A4, the printer starts printing/copying on the paper loaded in the rear tray without changing the paper size setting for printing/copying.

Replace paper

Select if you want to print after replacing the paper of the rear tray.

For example, when the paper size setting for printing/copying is A5 and the paper information registered to the printer is A4, you load A5 sized paper in the rear tray before you start printing/copying.

The paper information registration screen is displayed after replacing the paper. Register the paper information according to the paper that you loaded.

Cancel print

Cancels printing.

Select when you change the paper settings specified for printing/copying. Change the paper settings and try printing/copying again.

Copying

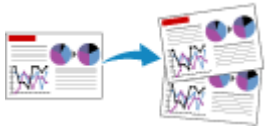

Making Copies Basics

Reducing/Enlarging Copies

Special Copy Menu

Making Copies

This section describes the basic procedure to perform standard copying.

1. Check that printer is turned on.

2. Load paper.

3. Select **Copy** on the HOME screen.

   ➡ LCD and Operation Panel

   The Copy standby screen is displayed.

4. Load original on platen.

5. Specify the number of copies using the ▲▼ button.

6. Specify settings as necessary.

   The print setting screen is displayed when you press the **OK** button.

   ➡ Setting Items for Copying

7. Press the **Black** button or the **Color** button.

   The printer starts copying.

   Remove the original on the platen after copying is complete.

   Important

   - Do not open the document cover or remove the original from the platen until scanning is completed.

Setting Items for Copying

You can change the copy settings such as magnification and intensity.

Note

- The setting currently specified appears in the selected state.
- Some setting items may not be able to be specified in combination with the setting of other setting items. is displayed in the setting item when setting that cannot be specified in the combined state is selected. Select the setting item, check the displayed message, and change the setting.

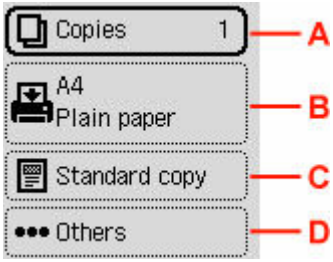

A: Number of copies

Specify the number of copies.

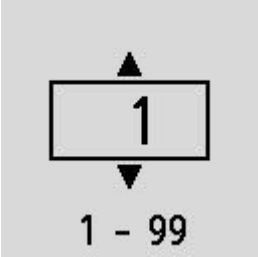

B: Paper settings

You can check the size and type of paper that is set currently.

C: Copy menu

- **Standard copy**

  You can copy images with the basic operations.

  ➡ Making Copies

- **Brdless copy**

  You can copy images so that they fill the entire page without borders.

  ➡ Copying without Borders

- **Frame erase**

  When copying thick originals such as books, you can make a copy without black margins around the image and gutter shadows.

  ➡ Copying Thick Originals Such as Books

- **ID copy**

  You can copy both sides of a card sized original such as an ID card onto a single sheet of paper.

  ➡ Copying ID Card to Fit onto Single Page

D: Others

- Layout

  Select the layout.

  ➡ Copying Two Pages onto Single Page
  ➡ Copying Four Pages onto Single Page

- Copy intensity

  Change the intensity (brightness).

- Enlarge/Reduce

  Select the reduction/enlargement method.

  ➡ Reducing/Enlarging Copies

- Print quality

  Specify the print quality.

  Note

  - The **Quality: Econ.** can be set when the paper type is normal paper.

Scanning

Scanning in Windows

Scanning in macOS

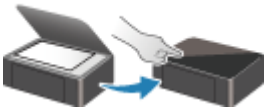

Scanning from Operation Panel

Scanning in Windows

- **Scanning According to Item Type or Purpose (IJ Scan Utility)**
  - IJ Scan Utility Features
  - Scanning Documents and Photos
  - Creating/Editing PDF Files
    - Setting Passwords for PDF Files
    - Editing Password-Protected PDF Files
  - Scanning with Favorite Settings
  - Scanning Originals Larger than the Platen (Image Stitch)
    - Adjusting Cropping Frames in the **Image Stitch** Window
  - Scanning Multiple Originals at One Time
  - Extracting Text from Scanned Images (OCR)
  - Sending Scanned Images via E-mail
  - Saving after Checking Scan Results
  - Starting IJ Scan Utility
  - IJ Scan Utility Screens
- **Scanning Using Application Software (ScanGear)**
- **Scanning Tips**
  - Positioning Originals (Scanning from Computer)
  - Network Scan Settings
    - IJ Network Scanner Selector EX2 Menu and Setting Screen
  - Scanning with WIA Driver
  - Resolution
  - Data Formats
  - Color Matching

Important

- Available functions and settings vary depending on your scanner or printer.

Scanning According to Item Type or Purpose (IJ Scan Utility)

- **IJ Scan Utility Features**
- **Scanning Documents and Photos**
- **Creating/Editing PDF Files**
  - Setting Passwords for PDF Files
  - Editing Password-Protected PDF Files
- **Scanning with Favorite Settings**
- **Scanning Originals Larger than the Platen (Image Stitch)**
  - Adjusting Cropping Frames in the **Image Stitch** Window
- **Scanning Multiple Originals at One Time**
- **Sending Scanned Images via E-mail**
- **Extracting Text from Scanned Images (OCR)**
- **Saving after Checking Scan Results**
- **Starting IJ Scan Utility**
- **IJ Scan Utility Screens**

Important

- Available functions and settings vary depending on your scanner or printer.

IJ Scan Utility Features

Use IJ Scan Utility to scan and save documents, photos, or other items at one time by simply clicking the corresponding icon.

Important

- Available functions, the displayed items, and available settings vary depending on your model.

Multiple Scanning Modes

Auto allows for one click scanning with default settings for various items. **Document** will sharpen text in a document or magazine for better readability, and **Photo** is best suited for scanning photos.

Note

- For details on the IJ Scan Utility main screen, see IJ Scan Utility Main Screen.

Save Scanned Images Automatically

Scanned images are automatically saved to a preset folder. The folder can be changed as needed.

Note

- The default save folders are as follows.
  - **Windows 11/Windows 10/Windows 8.1:**

    Documents folder
  - **Windows 7:**

    My Documents folder
- To change folder, see Settings Dialog Box.

Application Integration

Scanned images can be sent to other applications. For example, display scanned images in your favorite graphics application, attach them to e-mails, or extract text from images.

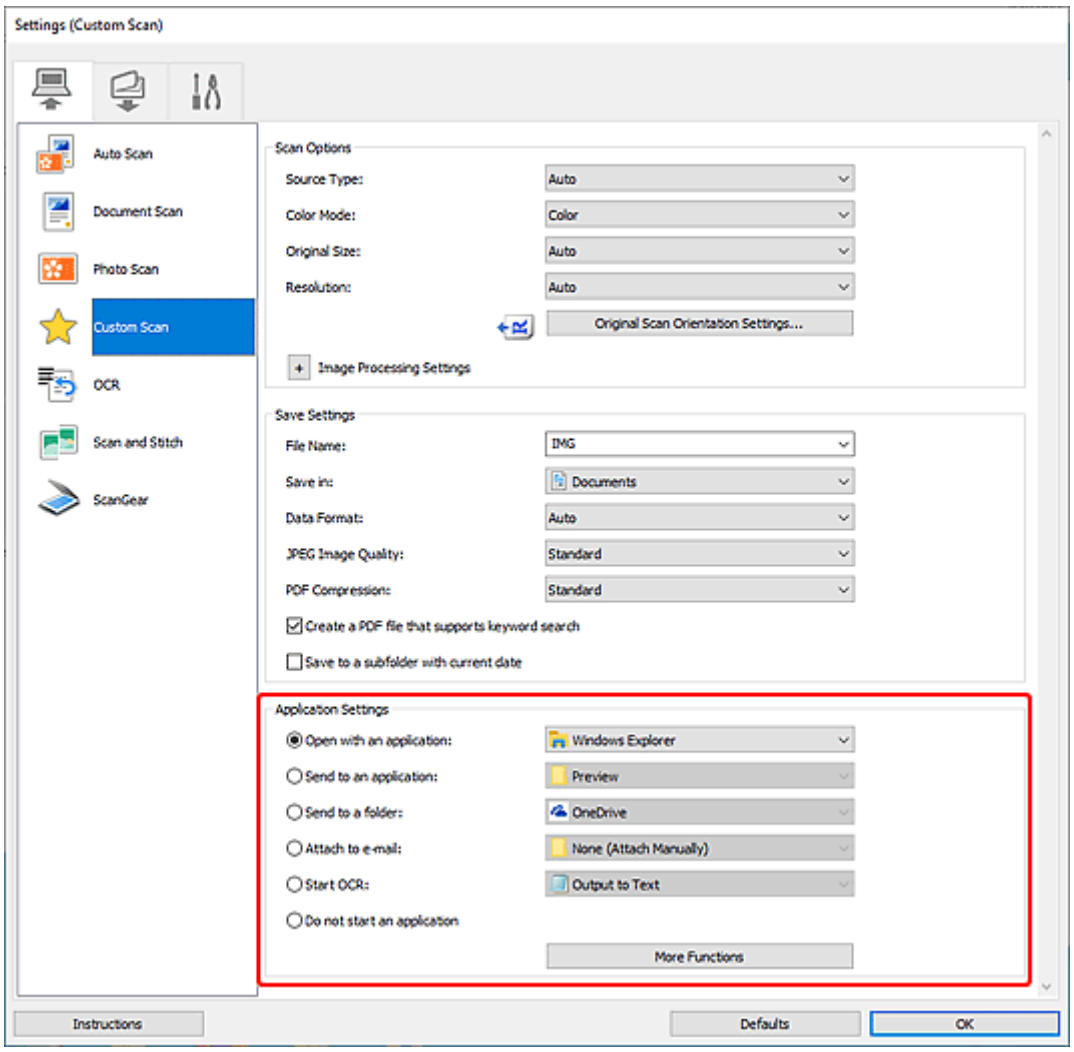

Note

- To set the applications to integrate with, see Settings Dialog Box.

Scanning Easily (Auto Scan)

Auto Scan allows for automatic detection of the type of the item placed on the platen or ADF (Auto Document Feeder).

Important

- This function is not supported depending on your model.
- The following types of items may not be scanned correctly. In that case, adjust the cropping frames (scan areas) in whole image view of ScanGear (scanner driver), and then scan again.
  - Photos with a whitish background
  - Items printed on white paper, hand-written text, business cards, and other unclear items
  - Thin items
  - Thick items
- When scanning two or more documents from the ADF, place documents of the same size.

1. Make sure scanner or printer is turned on.

2. Place items on platen or ADF.

   ➡ Positioning Originals (Scanning from Computer)

3. Start IJ Scan Utility.

4. Click **Auto** in the IJ Scan Utility main screen.

   Scanning starts.

Note

- To cancel the scan, click **Cancel**.
- Use the Settings (Scanning from a Computer) dialog box displayed by clicking **Settings...** to set where to save the scanned images and to make advanced scan settings.
- To scan a specific item type, see the following pages.

  ➡ Scanning Documents and Photos
  ➡ Scanning with Favorite Settings
  ➡ Scanning Multiple Documents at One Time from the ADF (Auto Document Feeder)

Scanning Documents and Photos

Scan items placed on the platen with settings suitable for documents or photos.

Save documents in formats such as PDF and JPEG, and photos in formats such as JPEG and TIFF.

1. Place the item on the platen.

   ➡ Positioning Originals (Scanning from Computer)

2. Start IJ Scan Utility.

3. To specify the paper size, resolution, PDF settings, etc., click **Settings...**, and then set each item in the Settings (Scanning from a Computer) dialog box.

   Note

   - Once settings are made in the Settings dialog box, the same settings can be used for scanning from the next time.
   - In the Settings dialog box, specify image processing settings such as slant correction and outline emphasis, set the destination of the scanned images, and more, as needed.

   When setting is completed, click **OK**.

4. Click **Document** or **Photo** in the IJ Scan Utility main screen.

   Scanning starts.

Note

- To cancel the scan, click **Cancel**.

Creating/Editing PDF Files

You can create PDF files by scanning items placed on the platen or ADF (Auto Document Feeder). Add, delete, rearrange pages or make other edits in the created PDF files.

Important

- You can create or edit up to 100 pages of a PDF file at one time.
- Only PDF files created or edited in IJ Scan Utility or IJ PDF Editor are supported. PDF files created or edited in other applications are not supported.

Note

- You can also create PDF files from images saved on a computer.
- Selectable file formats are PDF, JPEG, TIFF, and PNG.
- Images whose number of pixels in the vertical or horizontal direction is 10501 or more cannot be used.
- When you select a password-protected PDF file, you must enter the password.

  ➡ Editing Password-Protected PDF Files

1. Place items on platen or ADF.

2. Start IJ Scan Utility.

3. Click **PDF Editor** in the IJ Scan Utility main screen.

   IJ PDF Editor starts.

4. To specify the paper size, resolution, and other settings, click **Settings...** from the **File** menu, and then set each item in the Settings (Scanning from a Computer) dialog box.

   ### Note

   - Once settings are made in the Settings dialog box, the same settings can be used for scanning from the next time.
   - In the Settings dialog box, specify image processing settings such as slant correction and outline emphasis.

   When setting is completed, click **OK**.

5. Click (Scan) on Toolbar.

   Scanning starts.

   ### Note

   - To open a file saved on the computer, click **Open...** from the **File** menu, and then select the file you want to edit.
   - You can switch the view with the Toolbar buttons. For details, see PDF Edit Screen.

6. Add pages as needed.

When scanning and adding more items:

Place items, and then click (Scan) on the Toolbar.

When adding existing images or PDF files:

Click (Add Page) on the Toolbar. After the **Open** dialog box appears, select the image(s) or PDF file(s) you want to add, and then click **Open**.

Note

- You can also add images or PDF files from **Add Page from Saved Data...** in the **File** menu.

7. Edit pages as needed.

When changing page order:

Click the page you want to move, and then click (Page Up) or (Page Down) on the Toolbar to change the page order. You can also change the page order by dragging and dropping a page to the target location.

When deleting pages:

Click the page you want to delete, and then click (Delete Page) on the Toolbar.

Note

- These buttons appear when two or more pages have been created.

8. Select **Save As...** in **File** menu.

The **Save** dialog box appears.

9. Specify save settings.

Important

- The following items cannot be set for images whose resolution is outside the range of 75 dpi to 600 dpi or whose number of pixels in the vertical or horizontal direction is between 10201 pixels and 10500 pixels.
  - **PDF Compression**
  - **Create a PDF file that supports keyword search**
  - **Correct slanted text originals**
  - **Detect the orientation of text original and rotate image**

File Name

Enter a file name for the PDF file to be saved. When two or more pages have been created and you are saving each page separately, a sequential number is appended to the file names.

Save in

Set the folder in which to save PDF files. To change the folder, click **Browse...**, and then specify the destination folder.

Save to a subfolder with current date

Select this checkbox to create a current date folder in the folder specified in **Save in** and save created or edited PDF files in it. The folder will be created with a name such as "20XX_01_01" (Year_Month_Date).

If this checkbox is not selected, files are saved directly in the folder specified in **Save in**.

File Type

Select the file format for saving PDF files.

PDF

Save each page as a separate PDF file.

PDF (Multiple Pages)

Save multiple pages in one PDF file.

Note

- **PDF (Multiple Pages)** appears when two or more pages have been created.

PDF Compression

Select the compression type for saving.

Standard

It is recommended that you normally select this setting.

High

Compresses the file size when saving. This will reduce the load on your network and server.

Important

- If you save PDF files with high compression repeatedly, images may degrade.

Create a PDF file that supports keyword search

Select this checkbox to convert text in images into text data and create PDF files that support keyword search.

Correct slanted text originals

Select this checkbox to detect the document orientation based on the text in images and correct the angle (within the range of -0.1 to -10 degrees or +0.1 to +10 degrees) for creating PDF files.

Important

- The following types of image may not be corrected properly since the text cannot be detected correctly.
  - Images in which the text lines are inclined more than 10 degrees or the angles vary by line
  - Images containing both vertical and horizontal text
  - Images with extremely large or small fonts
  - Images with small amount of text
  - Images containing figures/images
  - Hand-written images

Detect the orientation of text original and rotate image

Select this checkbox to detect the page orientation based on the text in images and automatically rotate the images to the correct orientation for creating PDF files.

Important

- This function is available only for images (text documents) containing languages that can be selected from **Document Language** in the **Settings (General Settings)** dialog box of IJ Scan Utility. This function is not available depending on the language in the image.
- The page orientation of the following types of image may not be detected since the text cannot be detected correctly.
  - Images with small amount of text
  - Images containing text whose font size is outside the range of 8 points to 48 points
  - Images containing special fonts, effects, italics, or hand-written text
  - Images with patterned backgrounds

Set up password security

Select this checkbox to display the **Password Security Settings** dialog box for setting a password for opening the created PDF file or a password for printing/editing it.

Important

- When a password-protected PDF file is edited, the passwords will be deleted. Reset the passwords.

  ➡ Setting Passwords for PDF Files

10. Click **Save**.

The PDF file is saved.

Note

- When a password-protected PDF file is edited, the passwords will be deleted. Reset the passwords in the **Save** dialog box.

  ➡ Setting Passwords for PDF Files

- To overwrite a saved file, click (Save) on the Toolbar.

Scanning Using Application Software (ScanGear)

- What Is ScanGear (Scanner Driver)?
- Starting ScanGear (Scanner Driver)
- Scanning in Basic Mode
- ScanGear (Scanner Driver) Screens
- General Notes (Scanner Driver)
- Scanning in Advanced Mode
- Scanning Multiple Documents at One Time with ScanGear (Scanner Driver)
- Correcting Images and Adjusting Colors with ScanGear (Scanner Driver)
- Positioning Originals (Scanning from Computer)
- Adjusting Cropping Frames (ScanGear)
- Updating the ScanGear (Scanner Driver)

Important

- Available functions and settings vary depending on your scanner or printer.

What Is ScanGear (Scanner Driver)?

ScanGear (scanner driver) is software required for scanning documents. Use the software to specify the output size, image corrections, and other settings.

ScanGear can be started from IJ Scan Utility or applications that are compatible with the standard TWAIN interface. (ScanGear is a TWAIN-compatible driver.)

Features

Specify the document type, output size, and other settings when scanning documents and preview scan results. Make various correction settings or finely adjust the brightness, contrast, and other parameters to scan in a specific color tone.

Screens

There are two modes: Basic Mode and Advanced Mode.

Switch modes with the tabs on the upper right of the screen.

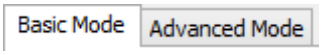

Note

- ScanGear starts in the last used mode.
- Settings are not retained when you switch modes.

Basic Mode

Use the **Basic Mode** tab to scan easily by following three simple on-screen steps (1, 2, and 3).

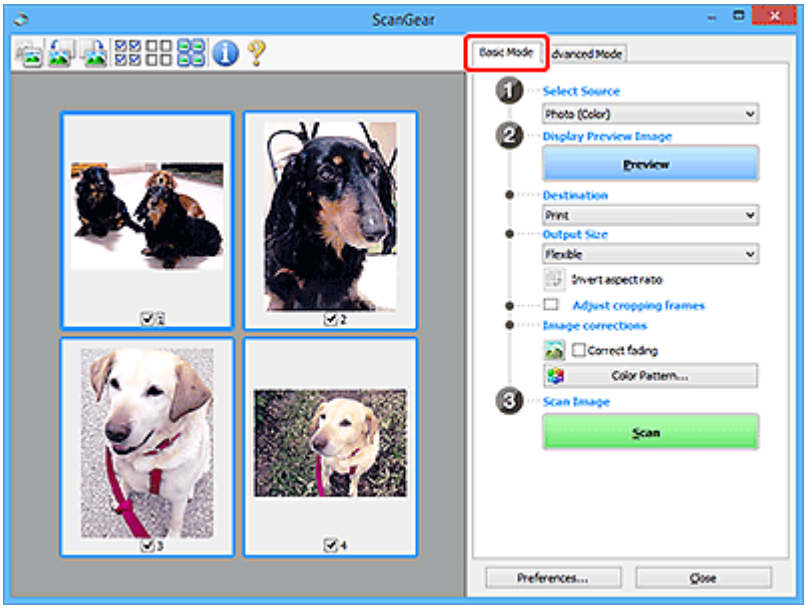

Advanced Mode

Use the **Advanced Mode** tab to scan by specifying the color mode, output resolution, image brightness, color tone, and other settings.

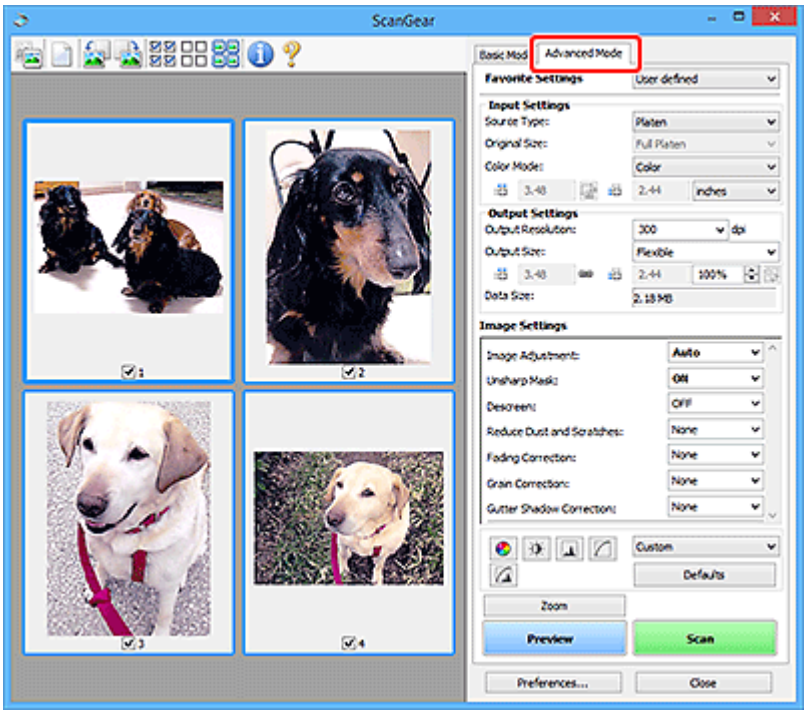

Starting ScanGear (Scanner Driver)

Use ScanGear (scanner driver) to make image corrections and color adjustments when scanning. Start ScanGear from IJ Scan Utility or other applications.

Note

- If you have more than one scanner or have a network compatible model and changed the connection from USB connection to network connection, set up the network environment.

Starting from IJ Scan Utility

1. Start IJ Scan Utility.

   For how to start it, see Starting IJ Scan Utility.

2. In IJ Scan Utility main screen, click ScanGear.

   The ScanGear screen appears.

Starting from Application

The procedure varies depending on the application. For details, see the application's manual.

1. Start application.

2. On application's menu, select machine.

   Note

   - A machine connected over a network, will have "Network" displayed after the product name.

3. Scan document.

   The ScanGear screen appears.

Scanning in Basic Mode

Use the **Basic Mode** tab to scan easily by following these simple on-screen steps.

To scan multiple documents at one time from the Platen, see Scanning Multiple Documents at One Time with ScanGear (Scanner Driver).

When scanning from the ADF (Auto Document Feeder), preview is not available.

Important

- The following types of documents may not be scanned correctly. In that case, click (Thumbnail) on the Toolbar to switch to whole image view and scan.
  - Photos with a whitish background
  - Documents printed on white paper, hand-written text, business cards, and other unclear documents
  - Thin documents
  - Thick documents
- The following types of documents cannot be scanned correctly.
  - Documents smaller than 1.2 inches (3 cm) square
  - Photos that have been cut to irregular shapes

Note

- Both sides of a two sided document can be scanned simultaneously on models with ADF duplex scanning support.

1. Place document on machine's Platen or ADF, and then start ScanGear (scanner driver).

   ➡ Positioning Originals (Scanning from Computer)
   ➡ Starting ScanGear (Scanner Driver)

2. Set **Select Source** to match your document.

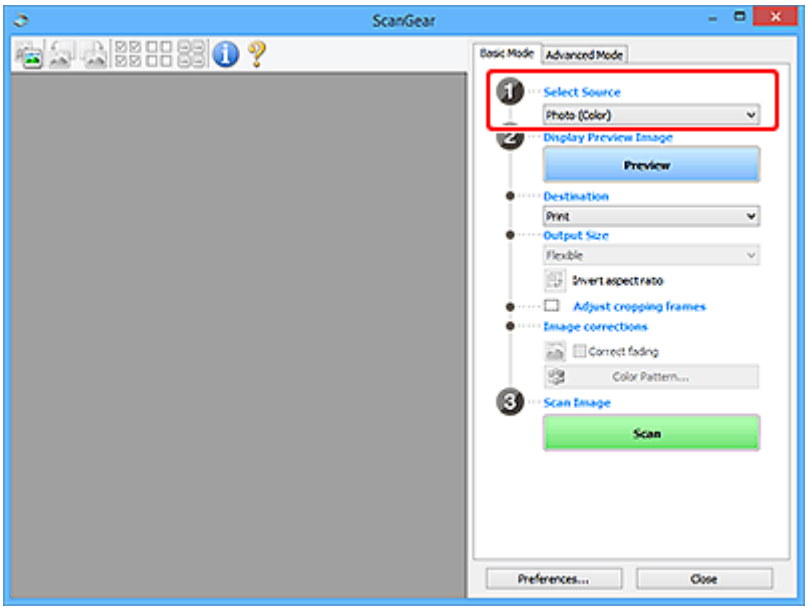

Important

- Some applications do not support continuous scanning from the ADF. For details, see the application's manual.

Note

- To scan magazines containing many color photos, select **Magazine (Color)**.

3. Click **Preview**.

Preview image appears in the Preview area.

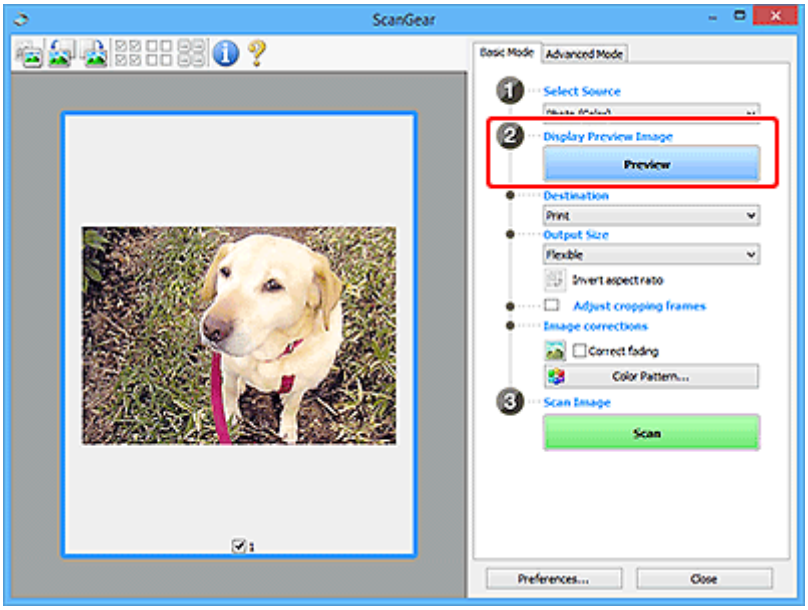

Important

- **Preview** is not available when scanning from the ADF.

Note

- Colors are adjusted based on the document type selected in **Select Source**.

4. Set **Destination**.

Note

- Skip ahead to Step 7 if an ADF option is selected in **Select Source**.

5. Set **Output Size**.

Output size options vary with the selected **Destination**.

6. Adjust cropping frames (scan areas) as needed.

Adjust the size and position of the cropping frames on the preview image.

➡ Adjusting Cropping Frames (ScanGear)

7. Set **Image corrections** as needed.

8. Click **Scan**.

   Scanning starts.

Note

- Click (Information) to display a dialog box showing the document type and other details of the current scan settings.
- How ScanGear behaves after scanning is complete can be set from **Status of ScanGear dialog after scanning** on the **Scan** tab of the **Preferences** dialog box.

Related Topic

➡ **Basic Mode** Tab

ScanGear (Scanner Driver) Screens

- Basic Mode Tab
- Advanced Mode Tab
- Preferences Dialog Box

Basic Mode Tab

Use the **Basic Mode** tab to scan easily by following these simple on-screen steps.

This section describes the settings and functions available on the **Basic Mode** tab.

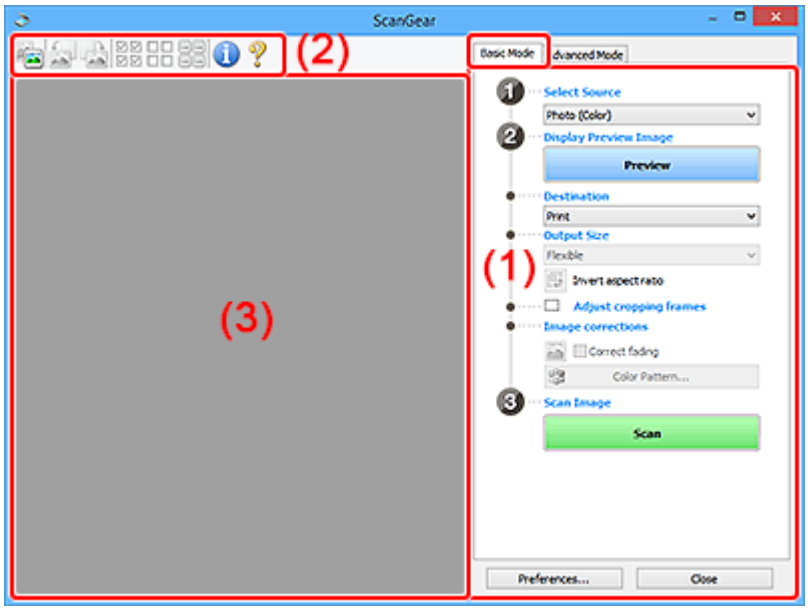

- (1) Settings and Operation Buttons
- (2) Toolbar
- (3) Preview Area

Note

- The displayed items vary by document type and view.
- Preview is not available when scanning from the ADF (Auto Document Feeder).

(1) Settings and Operation Buttons

Select Source

Photo (Color)

Scan color photos.

Magazine (Color)

Scan color magazines.

Document (Color)

Scan documents in color.

Document (Grayscale)

Scan documents in black and white.

Document (Color) ADF Simplex

Scan documents from the ADF in color.

Document (Grayscale) ADF Simplex

Scan documents from the ADF in black and white.

Document (Color) ADF Duplex (only for models supporting ADF duplex scanning)

Scan both sides of documents from the ADF in color.

Document (Grayscale) ADF Duplex (only for models supporting ADF duplex scanning)

Scan both sides of documents from the ADF in black and white.

Important

- Some applications do not support continuous scanning from the ADF. For details, see the application's manual.

Note

- When you select a document type, the unsharp mask function will be active.
- When you select an option other than the ADF types, the image adjustment function which adjusts images based on the document type will also be active.
- When you select **Magazine (Color)**, the descreen function will be active.

Display Preview Image

Preview

Performs a trial scan.

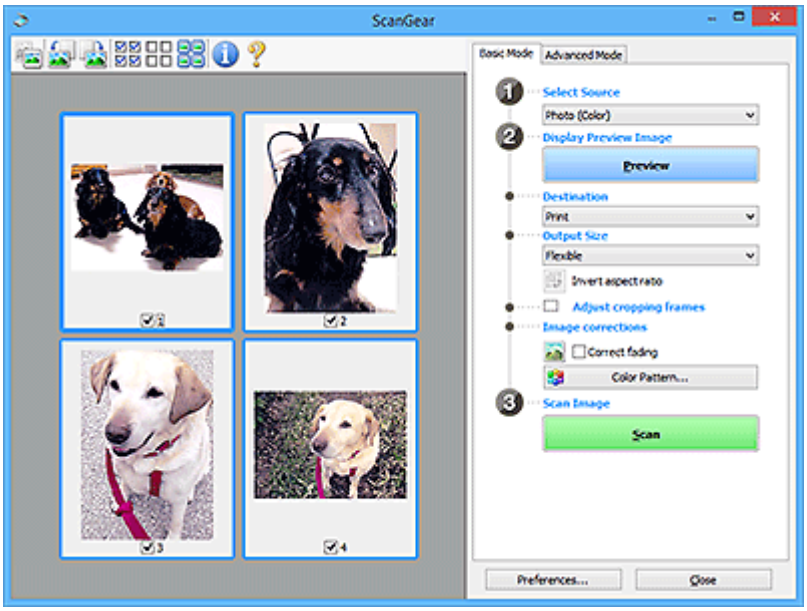

Note

- When using the machine for the first time, scanner calibration starts automatically. Wait a while until the preview image appears.

Destination

Select what you want to do with the scanned image.

Print

Select this to print the scanned image on a printer.

Image display

Select this to view the scanned image on a monitor.

OCR

Select this to use the scanned image with OCR software.

"OCR software" is software that converts text scanned as an image into text data that can be edited in word processors and other programs.

Output Size

Select an output size.

Output size options vary by the item selected in **Destination**.

Flexible

Adjust the cropping frames (scan areas) freely.

In thumbnail view:

Drag the mouse over a thumbnail to display a cropping frame. When a cropping frame is displayed, the portion within the cropping frame will be scanned. When no cropping frame is displayed, each frame is scanned individually.

In whole image view:

When no cropping frame is displayed, the entire Preview area will be scanned. When a cropping frame is displayed, the portion within the cropping frame will be scanned.

Paper Size (such as L or A4)

Select an output paper size. The portion within the cropping frame will be scanned at the size of the selected paper size. Drag the cropping frame to enlarge/reduce it while maintaining the aspect ratio.

Monitor Size (such as 1024 x 768 pixels)

Select an output size in pixels. A cropping frame of the selected monitor size will appear and the portion within the cropping frame will be scanned. Drag the cropping frame to enlarge/reduce it while maintaining the aspect ratio.

Add/Delete...

Displays the **Add/Delete the Output Size** dialog box for specifying custom output sizes. This option can be selected when **Destination** is **Print** or **Image display**.

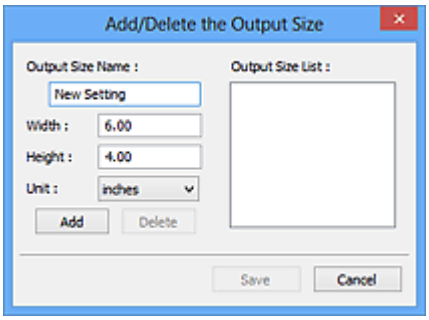

In the **Add/Delete the Output Size** dialog box, multiple output sizes can be specified and then saved at one time. Saved items will be registered to the **Output Size** list and can be selected, along with the predefined items.

Adding:

Enter **Output Size Name**, **Width**, and **Height**, and then click **Add**. For **Unit**, select **inches** or **mm** if **Destination** is **Print**; if it is **Image display**, only **pixels** can be selected. The name of the added size appears in **Output Size List**. Click **Save** to save the items listed in **Output Size List**.

Deleting:

Select the output size you want to delete in **Output Size List**, and then click **Delete**. Click **Save** to save the items listed in **Output Size List**.

Important

- Predefined output sizes such as **A4** and **1024 x 768 pixels** cannot be deleted.

Note

- Save up to 10 items.
- An error message appears when you enter a value outside the setting range. Enter a value within the setting range.

Note

- For details on whether or how the cropping frame initially appears on a preview image, see **Cropping Frame on Previewed Images** in **Preview** tab of **Preferences** Dialog Box.

Invert aspect ratio

Available when **Output Size** is set to anything but **Flexible**.

Click this button to rotate the cropping frame. Click again to return it to the original orientation.

Adjust cropping frames

Adjust the scan area within the Preview area.

If an area is not specified, the document will be scanned at the document size (Auto Crop). If an area is specified, only the portion in the cropping frame will be scanned.

➡ Adjusting Cropping Frames (ScanGear)

Image corrections

Correct the image to be scanned.

Important

- **Apply Auto Document Fix** and **Correct fading** are available when **Recommended** is selected on the **Color Settings** tab of the **Preferences** dialog box.

Note

- Available functions vary by the document type selected in **Select Source**.

Apply Auto Document Fix

Sharpens text in a document or magazine for better readability.

Important

- Scanning may take longer than usual when this checkbox is selected.
- The color tone may change from the source image due to corrections. In that case, deselect the checkbox and scan.
- Correction may not be applied properly if the scan area is too small.

Correct fading

Corrects photos that have faded with time or have a colorcast.

Correct gutter shadow

Corrects shadows that appear between pages when scanning open booklets.

Important

- Be sure to see **Gutter Shadow Correction** for precautions and other information on using this function.

Color Pattern...

Adjust the image's overall color. Correct colors that have faded due to colorcast or other reasons and reproduce natural colors while previewing color changes.

➡ Adjusting Colors Using a Color Pattern

Important

- This setting is not available when **Color Matching** is selected on the **Color Settings** tab of the **Preferences** dialog box.

Scan Image

Scan

Starts scanning.

Note

- When scanning starts, the progress appears. To cancel the scan, click **Cancel**.

Preferences...

Displays the **Preferences** dialog box for making scan/preview settings.

Close

Closes ScanGear (scanner driver).

(2) Toolbar

Adjust or rotate preview images. The buttons displayed on the Toolbar vary by view.

In thumbnail view:

In whole image view:

(Thumbnail) / **(Whole Image)**

Switches the view in the Preview area.

➡ (3) Preview Area

(Rotate Left)

Rotates the preview image 90 degrees counter-clockwise.

- The result will be reflected in the scanned image.

- The image returns to its original state when you preview again.

(Rotate Right)

Rotates the preview image 90 degrees clockwise.

- The result will be reflected in the scanned image.
- The image returns to its original state when you preview again.

(Auto Crop)

Displays and adjusts the cropping frame automatically to the size of the document displayed in the Preview area. The scan area is reduced every time you click this button if there are croppable areas within the cropping frame.

(Check All Frames)

Available when two or more frames are displayed.

Selects the checkboxes of the images in thumbnail view.

(Uncheck All Frames)

Available when two or more frames are displayed.

Deselects the checkboxes of the images in thumbnail view.

(Select All Frames)

Available when two or more frames are displayed.

Selects the images in thumbnail view and outlines them in blue.

(Select All Cropping Frames)

Available when two or more cropping frames are specified.

Turns the cropping frames into thick broken lines and applies the settings to all of them.

(Remove Cropping Frame)

Removes the selected cropping frame.

(Information)

Displays the version of ScanGear, along with the document type and other details of the current scan settings.

(Open Guide)

Opens this page.

(3) Preview Area

This is where a trial image appears after you click **Preview**. The results of image corrections, color adjustments, and other settings made in (1) Settings and Operation Buttons are also reflected.

When (Thumbnail) is displayed on Toolbar:

Cropping frames are specified according to the document size, and thumbnails of scanned images appear. Only the images with the checkbox selected will be scanned.

Note

- When multiple images are previewed, different outlines indicate different selection status.
  - Focus Frame (thick blue outline): The displayed settings will be applied.
  - Selected Frame (thin blue outline): The settings will be applied to the Focus Frame and Selected Frames simultaneously. To select multiple images, click them while pressing the Ctrl key.
  - Unselected (no outline): The settings will not be applied.
- Double-click a frame to enlarge the image. Click (Frame Advance) at the bottom of the screen to display the previous or next frame. Double-click the enlarged frame again to return it to its original state.

When (Whole Image) is displayed on Toolbar:

Items on the Platen are scanned and appear as a single image. All portions in the cropping frames will be scanned.

Note

- Create cropping frame(s) on the displayed image. In thumbnail view, one cropping frame can be created per image. In whole image view, multiple cropping frames can be created.

  ➡ Adjusting Cropping Frames (ScanGear)

Related Topic

➡ Scanning in Basic Mode

Advanced Mode Tab

This mode allows you to make advanced scan settings such as the color mode, output resolution, image brightness, and color tone.

This section describes the settings and functions available on the **Advanced Mode** tab.

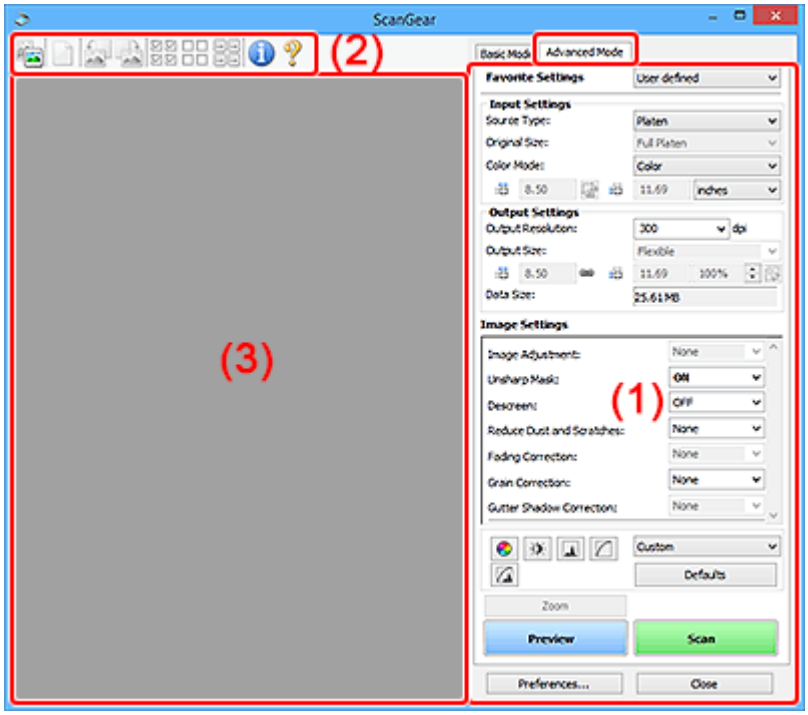

- [(1) Settings and Operation Buttons]
- [(2) Toolbar]
- [(3) Preview Area]

Important

- The displayed items vary depending on your model, document type, and view.
- The preview function is not available when scanning from the ADF (Auto Document Feeder).

(1) Settings and Operation Buttons

Favorite Settings

You can name and save a group of settings (Input Settings, Output Settings, Image Settings, and Color Adjustment Buttons) on the **Advanced Mode** tab, and load it as required. It is convenient to save a group of settings if you will be using it repeatedly. You can also use this to reload the default settings.

Select **Add/Delete...** from the pull-down menu to open the **Add/Delete Favorite Settings** dialog box.

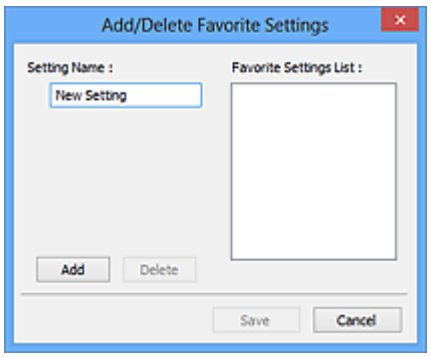

Enter **Setting Name** and click **Add**; the name appears in **Favorite Settings List**.

When you click **Save**, the item appears in the **Favorite Settings** list and can be selected, along with the predefined items.

To delete an item, select it in **Favorite Settings List** and click **Delete**. Click **Save** to save the settings displayed in **Favorite Settings List**.

Note

- You can set **Add/Delete...** in **Favorite Settings** after preview.
- Save up to 10 items.

Input Settings

Specify the input settings such as the document type and size.

Output Settings

Specify the output settings such as the output resolution and size.

Image Settings

Enable/disable various image correction functions.

Color Adjustment Buttons

Fine corrections to the image brightness and color tones can be made including adjustments to the image's overall brightness or contrast and adjustments to its highlight and shadow values (histogram) or balance (tone curve).

Zoom

Zooms in on a frame, or zooms in on the image in the area specified with a cropping frame (scan area). When zoomed in, **Zoom** changes to **Undo**. Click **Undo** to return the display to its non-magnified state.

In thumbnail view:

When multiple images are displayed in thumbnail view, clicking this button zooms in on the selected frame. Click (Frame Advance) at the bottom of the screen to display the previous or next frame.

Note

- You can also zoom in on an image by double-clicking the frame. Double-click the enlarged frame again to return it to its original state.

In whole image view:

Rescans the image in the area specified with a cropping frame at higher magnification.

Note

- **Zoom** rescans the document and displays high-resolution image in Preview.
- (Enlarge/Reduce) on the Toolbar zooms in on the preview image quickly. However, the resolution of the displayed image will be low.

Preview

Performs a trial scan.

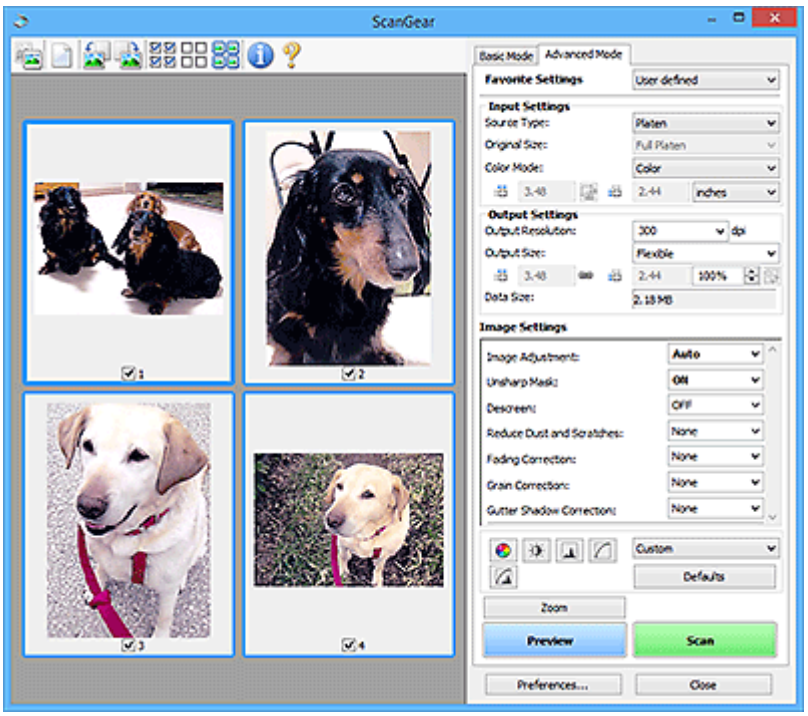

Scan

Starts scanning.

Note

- When scanning starts, the progress appears. To cancel the scan, click **Cancel**.
- When scanning is completed, a dialog box prompting you to select the next action may appear. Follow the prompt to complete. For details, see **Status of ScanGear dialog after scanning** in **Scan** tab of **Preferences** dialog box.
- It will take time to process the images if the total size of the scanned images exceeds a certain size. In that case, a warning message appears; it is recommended that you reduce the total size. To continue, scan in whole image view.

Preferences...

Displays the **Preferences** dialog box for making scan/preview settings.

Close

Closes ScanGear (scanner driver).

(2) Toolbar

Adjust or rotate preview images. The buttons displayed on the Toolbar vary by view.

In thumbnail view:

In whole image view:

(Thumbnail) / **(Whole Image)**

Switches the view in the Preview area.

➡ (3) Preview Area

(Clear)

Deletes the preview image from the Preview area.

It also resets the Toolbar and color adjustment settings.

(Crop)

Allows you to specify the scan area by dragging the mouse.

 (Move Image)

Allows you to drag the image until the part you want to see is displayed when an image enlarged in the Preview area does not fit in the screen. You can also move the image using the scroll bars.

(Enlarge/Reduce)

Allows you to zoom in on the Preview area by clicking the image. Right-click the image to zoom out.

(Rotate Left)

Rotates the preview image 90 degrees counter-clockwise.

- The result will be reflected in the scanned image.
- The image returns to its original state when you preview again.

(Rotate Right)

Rotates the preview image 90 degrees clockwise.

- The result will be reflected in the scanned image.
- The image returns to its original state when you preview again.

(Auto Crop)

Displays and adjusts the cropping frame automatically to the size of the document displayed in the Preview area. The scan area is reduced every time you click this button if there are croppable areas within the cropping frame.

(Check All Frames)

Available when two or more frames are displayed.

Selects the checkboxes of the images in thumbnail view.

(Uncheck All Frames)

Available when two or more frames are displayed.

Deselects the checkboxes of the images in thumbnail view.

(Select All Frames)

Available when two or more frames are displayed.

Selects the images in thumbnail view and outlines them in blue.

(Select All Cropping Frames)

Available when two or more cropping frames are specified.

Turns the cropping frames into thick broken lines and applies the settings to all of them.

(Remove Cropping Frame)

Removes the selected cropping frame.

(Information)

Displays the version of ScanGear, along with the document type and other details of the current scan settings.

(Open Guide)

Opens this page.

(3) Preview Area

This is where a trial image appears after you click **Preview**. The results of image corrections, color adjustments, and other settings made in (1) Settings and Operation Buttons are also reflected.

When (Thumbnail) is displayed on Toolbar:

Cropping frames are specified according to the document size, and thumbnails of scanned images appear. Only the images with the checkbox selected will be scanned.

Note

- When multiple images are previewed, different outlines indicate different selection status.
  - Focus Frame (thick blue outline): The displayed settings will be applied.
  - Selected Frame (thin blue outline): The settings will be applied to the Focus Frame and Selected Frames simultaneously. To select multiple images, click them while pressing the Ctrl key.
  - Unselected (no outline): The settings will not be applied.

When (Whole Image) is displayed on Toolbar:

Items on the Platen are scanned and appear as a single image. All portions in the cropping frames will be scanned.

Note

- Create cropping frame(s) on the displayed image. In thumbnail view, one cropping frame can be created per image. In whole image view, multiple cropping frames can be created.

  ➡ Adjusting Cropping Frames (ScanGear)

Related Topic

➡ Scanning in Advanced Mode
➡ Scanning Multiple Documents from the ADF (Auto Document Feeder) in Advanced Mode

General Notes (Scanner Driver)

ScanGear (scanner driver) is subject to the following restrictions. Keep these points in mind when using it.

Scanner Driver Restrictions

- When using the NTFS file system, the TWAIN data source may not be invoked. This is because the TWAIN module cannot be written to the winnt folder for security reasons. Contact the computer's administrator for help.
- Some computers (including laptops) connected to the machine may not resume correctly from standby mode. In that case, restart the computer.
- Do not connect two or more scanners or multifunction printers with scanner function to the same computer simultaneously. If multiple scanning devices are connected, you cannot scan from the operation panel or scanner buttons of the machine and also may experience errors while accessing the devices.
- Calibration may take time if the machine is connected via USB 1.1.
- Scanning may fail if the computer has resumed from sleep or standby mode. In that case, follow these steps and scan again.

  If your model has no power button, perform Step 2 only.

  1. Turn off the machine.
  2. Exit ScanGear, then disconnect the USB cable from the computer and reconnect it.
  3. Turn on the machine.

  If scanning still fails, restart the computer.

- ScanGear cannot be opened in multiple applications at the same time. Within an application, ScanGear cannot be opened for the second time when it is already open.
- Be sure to close the ScanGear window before closing the application.
- When using a network compatible model by connecting to a network, the machine cannot be accessed from multiple computers at the same time.
- When using a network compatible model by connecting to a network, scanning takes longer than usual.
- Make sure that you have adequate disk space available when scanning large images at high resolutions. For example, at least 300 MB of free space is required to scan an A4 document at 600 dpi in full-color.
- ScanGear and WIA driver cannot be used at the same time.
- Do not enter the computer into sleep or hibernate state during scanning.

Applications with Restrictions on Use

- Some applications may not display the TWAIN user interface. In that case, refer to the application's manual and change the settings accordingly.
- Some applications do not support continuous scanning of multiple documents. In some cases, only the first scanned image is accepted, or multiple images are scanned as one image. For such applications, do not scan multiple documents from the ADF (Auto Document Feeder).
- To import scanned images into Microsoft Office 2000, first save them using IJ Scan Utility, then import the saved files from the **Insert** menu.

- When scanning Platen size images into Microsoft Office 2003 (Word, Excel, PowerPoint, etc.), click **Custom Insert** in the **Insert Picture from Scanner or Camera** screen. Otherwise, images may not be scanned correctly.
- When scanning images into Microsoft Office 2007/Microsoft Office 2010 (Word, Excel, PowerPoint, etc.), use Microsoft Clip Organizer.
- Images may not be scanned correctly in some applications. In that case, increase the operating system's virtual memory and retry.
- When image size is too large (such as when scanning large images at high resolution), your computer may not respond or the progress bar may remain at 0 % depending on the application. In that case, cancel the action (for example by clicking **Cancel** on the progress bar), then increase the operating system's virtual memory or reduce the image size/resolution and retry. Alternatively, scan the image via IJ Scan Utility first, then save and import it into the application.

Scanning Tips

- **Positioning Originals (Scanning from Computer)**
- **Network Scan Settings**
  - IJ Network Scanner Selector EX2 Menu and Setting Screen
- **Scanning with WIA Driver**
- **Resolution**
- **Data Formats**
- **Color Matching**

Positioning Originals (Scanning from Computer)

This section describes how to load originals on the platen or ADF (Auto Document Feeder) for scanning. If items are not placed correctly they may not be scanned correctly.

Important

- Be sure to observe the following when loading the original on the platen. Failure to observe the following may cause the scanner to malfunction or the platen glass to break.
  - Do not place any objects weighing 4.4 lb (2.0 kg) or more on the platen glass.
  - Do not put any pressure of 4.4 lb (2.0 kg) or more on the platen glass, such as pressing down the original.
- Close the document cover when scanning.
- Do not touch the operation panel buttons or LCD (Liquid Crystal Display) when opening/closing the document cover. May result in unintended operation.

➡ Placing Items (Platen)
➡ Placing Documents (ADF (Auto Document Feeder))

Placing Items (Platen)

Place items as described below to scan by detecting the item type and size automatically.

Important

- Depending on your model, the function to scan by automatically detecting the item type and size does not appear.
- When scanning by specifying the paper size in IJ Scan Utility or ScanGear (scanner driver), align an upper corner of the item with the corner at the arrow (alignment mark) of the platen.
- Photos that have been cut to irregular shapes and items smaller than 1.2 inches (3 cm) square cannot be cropped accurately when scanning.
- Reflective disc labels may not be scanned as expected.
- If scanned by detecting the item type and size automatically, the response may differ. In that case, adjust the cropping frame (scan area) manually.

Photos, Postcards, Business Cards, and BD/DVD/CD	Magazines, Newspapers, and Documents
 Single item: Place the item face-down on the platen, with 0.4 inch (1 cm) or more space between the edges (diagonally striped area) of the platen and the item. Portions placed on the diagonally striped area cannot be scanned.	 Place the item face-down on the platen and align an upper corner of the item with the corner at the arrow (alignment mark) of the platen. Portions placed on the diagonally striped area cannot be scanned.

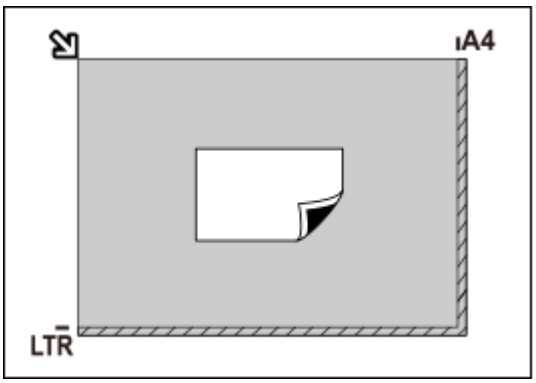

Important

- Large items (such as A4 size photos) that cannot be placed away from the edges/arrow (alignment mark) of the platen may be saved as PDF files. To save in a format other than PDF, scan by specifying the data format.

Multiple items:

Allow 0.4 inch (1 cm) or more space between the edges (diagonally striped area) of the platen and items, and between items. Portions placed on the diagonally striped area cannot be scanned.

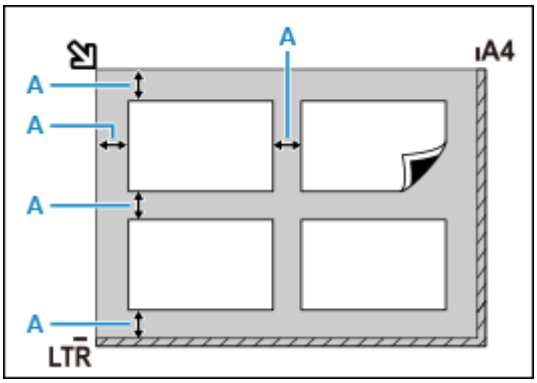

A : 0.4 inch (1 cm) or more

Note

- Place up to 12 items.
- Positions of slanted items (10 degrees or less) are corrected automatically.

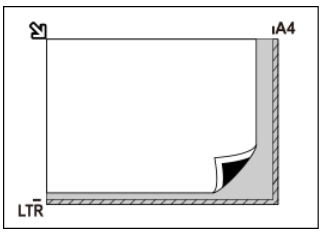

Important

- For the portions in which items cannot be scanned, see Loading Originals.

Placing Documents (ADF (Auto Document Feeder))

Important

- Be careful not to let anything get inside the document output slot. It may cause damage.
- Place and align documents of the same size when scanning two or more documents.
- For supported document sizes when scanning from the ADF, see Supported Originals.

Note

- To scan a document at optimum quality, load it on the platen.

1. Make sure any original has been removed from platen.

2. Open document tray (A).

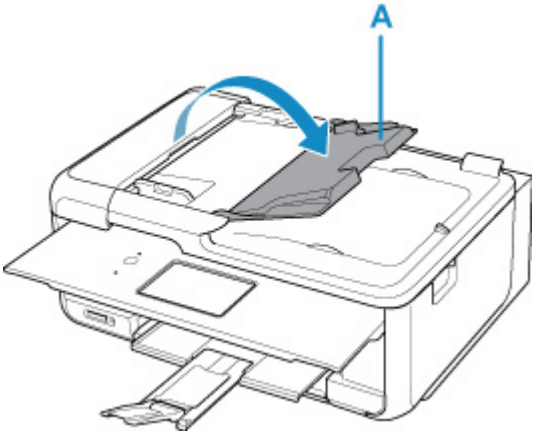

3. Slide the document guide (B) all the way out.

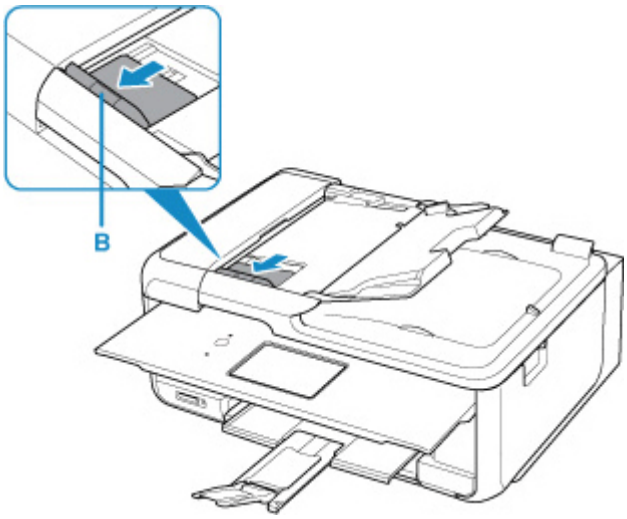

Note

- The location and number of document guides may vary depending on your model.

4. Load document with side to scan facing up in document tray.

   Insert the document until it stops.

5. Adjust document guide to match width of document.

   Do not slide the document guide too hard against the document. The document may not be fed properly.

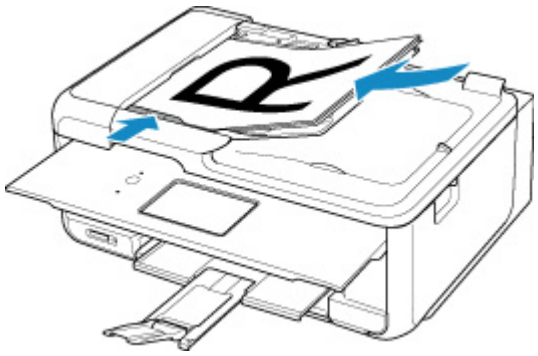

Note

- When scanning duplex documents, place the front sides facing up. They will not be scanned correctly if placed the other way around.

Network Scan Settings

You can connect your scanner or printer to a network to share it among multiple computers or scan images into a specified computer.

Important

- Multiple users cannot scan at the same time.

Note

- Complete the network settings of your scanner or printer beforehand by following the instructions on our website.
- With network connection, scanning takes longer than USB connection.

Complete the following settings to enable scanning over a network.

Specifying Your Scanner or Printer

Use IJ Network Scanner Selector EX to specify the scanner you want to use. By specifying the scanner, you can scan over a network from your computer or the operation panel.

Important

- If the product you want to use is changed with IJ Network Scanner Selector EX, the product used for scanning with IJ Scan Utility changes as well. The product for scanning from the operation panel also changes.

  If your scanner or printer is not selected in IJ Scan Utility, check that it is selected with IJ Network Scanner Selector EX.

  Refer to "IJ Network Scanner Selector EX2 Menu and Setting Screen" for details.
- To scan from the operation panel, specify your scanner or printer with IJ Network Scanner Selector EX beforehand.

1. Check that IJ Network Scanner Selector EX is running.

   If IJ Network Scanner Selector EX is running, (IJ Network Scanner Selector EX2) appears in the notification area on the desktop. Click to check the hidden icons as well.

   Note

   - If the icon is not displayed in the notification area on the desktop, follow the procedure below to start.

     — **Windows 11/Windows 10:**

     From the **Start** menu, click (**All apps** >) **Canon Utilities** > **IJ Network Scanner Selector EX2**.

     — **Windows 8.1:**

     Click **IJ Network Scanner Selector EX2** on the Start screen.

If **IJ Network Scanner Selector EX2** is not displayed on the Start screen, select the **Search** charm, then search for "IJ Network Scanner Selector EX2".

– **Windows 7:**

From the **Start** menu, click **All Programs** > **Canon Utilities** > **IJ Network Scanner Selector EX2** > **IJ Network Scanner Selector EX2**.

The icon appears in the notification area on the desktop, and the Scan-from-PC Settings screen appears. In that case, skip ahead to Step 3.

2. In the notification area on the desktop, right-click (IJ Network Scanner Selector EX2), then select **Settings...**.

   The Scan-from-PC Settings screen appears.

3. Select your scanner or printer from **Scanners**.

   Normally, the MAC address of your scanner or printer is already selected after the network setup. In that case, you do not need to select it again.

   Important

   - If multiple scanners exist on the network, multiple model names appear. In that case, you can select one scanner per model.

4. Click **OK**.

Note

- The scanner selected in the Scan-from-PC Settings screen will be automatically selected in the Scan-from-Operation-Panel Settings screen as well.

Setting for Scanning with IJ Scan Utility

To scan from IJ Scan Utility using a scanner or printer connected to a network, specify your scanner or printer with IJ Network Scanner Selector EX, then follow the steps below to change the connection status between it and the computer.

1. Start IJ Scan Utility.

2. Select "Canon XXX series Network" (where "XXX" is the model name) for **Scanner**.

3. Click **Settings...** to use another scanner connected to a network.

4. Click (General Settings), then click **Select** in **Product Name**.

   The Scan-from-PC Settings screen of IJ Network Scanner Selector EX appears.

   Select the scanner you want to use and click **OK**.

5. In the **Settings (General Settings)** dialog box, click **OK**.

   The IJ Scan Utility main screen reappears. You can scan via a network connection.

Setting for Scanning from the Operation Panel

You can make the setting for scanning from the operation panel.

Important

- Set IJ Scan Utility to use your scanner or printer via a network connection beforehand.

  ➡ Setting for Scanning with IJ Scan Utility

1. Check that IJ Network Scanner Selector EX is running.

   If IJ Network Scanner Selector EX is running, (IJ Network Scanner Selector EX2) appears in the notification area on the desktop. Click to check the hidden icons as well.

   Note

   - If the icon is not displayed in the notification area on the desktop, follow the procedure below to start.

     – **Windows 11/Windows 10:**

       From the **Start** menu, click (**All apps** >) **Canon Utilities** > **IJ Network Scanner Selector EX2**.

     – **Windows 8.1:**

       Click **IJ Network Scanner Selector EX2** on the Start screen.

       If **IJ Network Scanner Selector EX2** is not displayed on the Start screen, select the **Search** charm, then search for "IJ Network Scanner Selector EX2".

     – **Windows 7:**

       From the **Start** menu, click **All Programs** > **Canon Utilities** > **IJ Network Scanner Selector EX2** > **IJ Network Scanner Selector EX2**.

     The icon appears in the notification area on the desktop, and the Scan-from-PC Settings screen appears. In that case, skip ahead to Step 3.

2. In the notification area on the desktop, right-click (IJ Network Scanner Selector EX2), then select **Settings...**.

   The Scan-from-PC Settings screen appears.

3. Click **Scan-from-Operation-Panel Settings**.

   The Scan-from-Operation-Panel Settings screen appears.

4. Select your scanner or printer from **Scanners** and click **OK**.

Select the MAC address of your scanner or printer.

Note

- When multiple scanners are connected via a network, you can select up to three scanners.

5. In the Scan-from-PC Settings screen, click **OK**.

Note

- If your scanner or printer does not appear, check the following, click **OK** to close the screen, then reopen it and try selecting again.
  - MP Drivers is installed
  - Network settings of your scanner or printer is completed after installing the MP Drivers
  - Network communication between your scanner or printer and computer is enabled

  If the problem is still not solved, see Network Communication Problems.

Scanning in macOS

- **Scanning According to Item Type or Purpose (IJ Scan Utility Lite)**
  - IJ Scan Utility Lite Features
  - Scanning Documents and Photos
  - Scanning with Favorite Settings
  - Scanning Originals Larger than the Platen (Image Stitch)
    - Adjusting Cropping Frames in the **Image Stitch** Window
  - Scanning Multiple Originals at One Time
  - Extracting Text from Scanned Images (OCR)
  - Sending Scanned Images via E-mail
  - Saving after Checking Scan Results
  - Starting IJ Scan Utility Lite
  - IJ Scan Utility Lite Screens
- **Scanning Tips**
  - Positioning Originals (Scanning from Computer)
  - Resolution
  - Data Formats

Important

- Available functions and settings vary depending on your scanner or printer.

Scanning According to Item Type or Purpose (IJ Scan Utility Lite)

- IJ Scan Utility Lite Features
- Scanning Documents and Photos
- Scanning with Favorite Settings
- Scanning Originals Larger than the Platen (Image Stitch)
  - Adjusting Cropping Frames in the **Image Stitch** Window
- Scanning Multiple Originals at One Time
- Extracting Text from Scanned Images (OCR)
- Sending Scanned Images via E-mail
- Saving after Checking Scan Results
- Starting IJ Scan Utility Lite
- IJ Scan Utility Lite Screens

Important

- Available functions and settings vary depending on your scanner or printer.

IJ Scan Utility Lite Features

Use IJ Scan Utility Lite to scan and save documents, photos, or other items at one time by simply clicking the corresponding icon.

Important

- The displayed items and available functions vary depending on your scanner or printer.

Multiple Scanning Modes

Auto allows for one click scanning with default settings for various items. **Document** will sharpen text in a document or magazine for better readability, and **Photo** is best suited for scanning photos.

Note

- For details on the IJ Scan Utility Lite main screen, see IJ Scan Utility Lite Main Screen.

Save Scanned Images Automatically

Scanned images are automatically saved to a preset folder. The folder can be changed as needed.

Note

- The default save folder is the **Pictures** folder.
- For how to specify a folder, see Settings Dialog.

Application Integration

Scanned images can be sent to other applications. For example, display scanned images in your favorite graphics application, attach them to e-mails, or extract text from images.

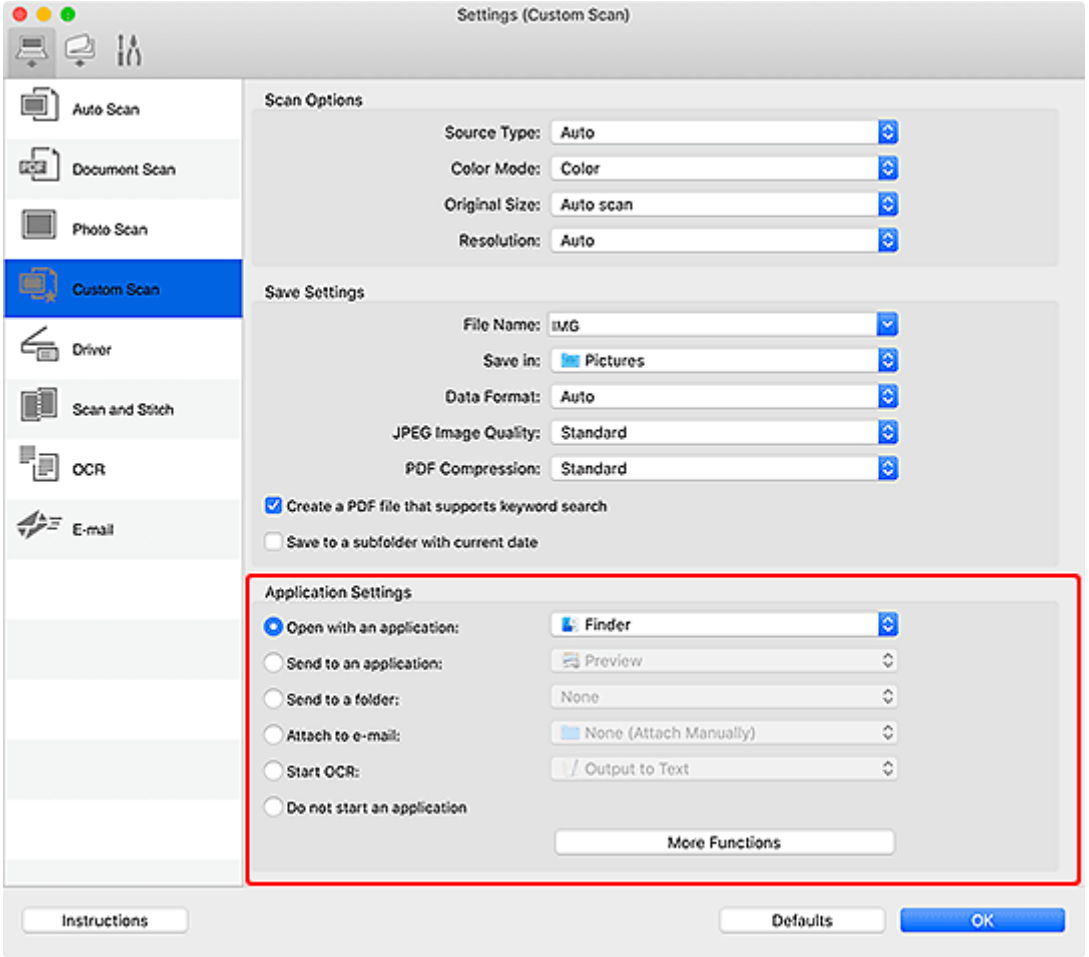

Note

- To set the applications to integrate with, see Settings Dialog.

Scanning Easily (Auto Scan)

Auto Scan allows for automatic detection of the type of the item placed on the platen or ADF (Auto Document Feeder).

Important

- This function is not supported depending on your model.
- The following types of items may not be scanned correctly. In that case, adjust the cropping frames (selection boxes; scan areas) in the screen displayed by clicking **Driver** in the IJ Scan Utility Lite main screen, and then scan again.
  - Photos with a whitish background
  - Items printed on white paper, hand-written text, business cards, and other unclear items
  - Thin items
  - Thick items
- When scanning two or more documents from the ADF, place documents of the same size.

1. Check that scanner or printer is turned on.

2. Place items on platen or ADF.

   ➡ Positioning Originals (Scanning from Computer)

3. Start IJ Scan Utility Lite.

4. Click **Auto** in the IJ Scan Utility Lite main screen.

   Scanning starts.

Note

- To cancel the scan, click **Cancel**.
- Use the Settings (Scanning from a Computer) dialog to set where to save the scanned images and to make advanced scan settings.
- To scan a specific item type, see the following pages.

  ➡ Scanning Documents and Photos
  ➡ Scanning with Favorite Settings
  ➡ Scanning Multiple Documents at One Time from the ADF (Auto Document Feeder)

Scanning Documents and Photos

Scan items placed on the platen with settings suitable for documents or photos.

Save documents in formats such as PDF and JPEG, and photos in formats such as JPEG and TIFF.

1. Place the item on the platen.

   ➡ Positioning Originals (Scanning from Computer)

2. Start IJ Scan Utility Lite.

3. To specify the paper size, resolution, PDF settings, etc., click **Settings...**, and then set each item in the Settings dialog.

   Note

   - Once settings are made in the Settings dialog, the same settings can be used for scanning from the next time.
   - In the Settings dialog, specify image processing settings such as slant correction, set where to save the scanned images, and more, as needed.

   When setting is completed, click **OK**.

4. Click **Document** or **Photo** in the IJ Scan Utility Lite main screen.

   Scanning starts.

Note

- To cancel the scan, click **Cancel**.

Scanning Tips

- Positioning Originals (Scanning from Computer)
- Resolution
- Data Formats

Positioning Originals (Scanning from Computer)

This section describes how to load originals on the platen or ADF (Auto Document Feeder) for scanning. If items are not placed correctly they may not be scanned correctly.

Important

- Be sure to observe the following when loading the original on the platen. Failure to observe the following may cause the scanner to malfunction or the platen glass to break.
  - Do not place any objects weighing 4.4 lb (2.0 kg) or more on the platen glass.
  - Do not put any pressure of 4.4 lb (2.0 kg) or more on the platen glass, such as pressing down the original.
- Close the document cover when scanning.
- Do not touch the operation panel buttons or LCD (Liquid Crystal Display) when opening/closing the document cover. May result in unintended operation.
- When using a personal scanner in the upright position, the item type may not be detected automatically. In that case, specify the item type in IJ Scan Utility Lite and scan.

➡ Placing Items (Platen)
➡ Placing Documents (ADF (Auto Document Feeder))
➡ Placing Items (When Using Stand)

Placing Items (Platen)

Place items as described below to scan by detecting the item type and size automatically.

Important

- Depending on your model, the function to scan by automatically detecting the item type and size does not appear.
- When scanning by specifying the paper size, align an upper corner of the item with the corner at the arrow (alignment mark) of the platen.
- Photos that have been cut to irregular shapes and items smaller than 1.2 inches (3 cm) square cannot be cropped accurately when scanning.
- Reflective disc labels may not be scanned as expected.
- If scanned by detecting the item type and size automatically, the response may differ. In that case, adjust the cropping frame (selection box) manually.

Photos, Postcards, Business Cards, and BD/DVD/CD	Magazines, Newspapers, and Documents
	Place the item face-down on the platen and align an upper corner of the item with the corner at the arrow (alignment mark) of the platen. Portions placed on

Single item:

Place the item face-down on the platen, with 0.4 inch (1 cm) or more space between the edges (diagonally striped area) of the platen and the item. Portions placed on the diagonally striped area cannot be scanned.

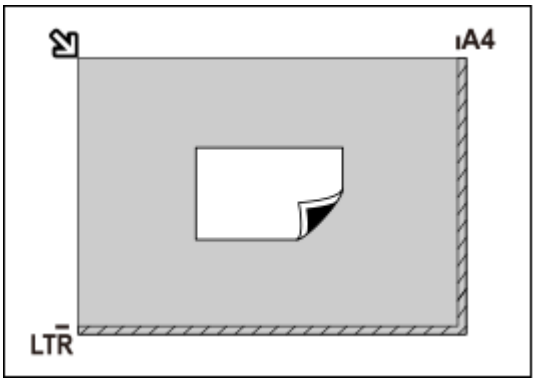

Important

- Large items (such as A4 size photos) that cannot be placed away from the edges/arrow (alignment mark) of the platen may be saved as PDF files. To save in a format other than PDF, scan by specifying the data format.

Multiple items:

Allow 0.4 inch (1 cm) or more space between the edges (diagonally striped area) of the platen and items, and between items. Portions placed on the diagonally striped area cannot be scanned.

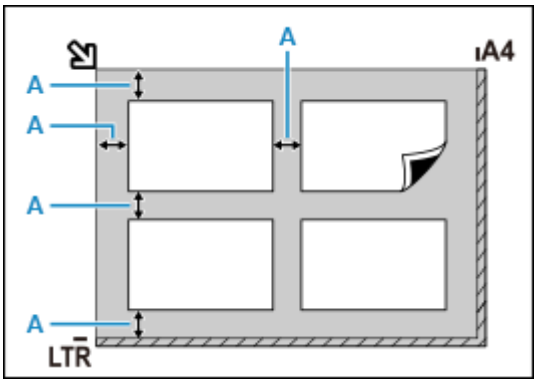

A : 0.4 inch (1 cm) or more

Note

- In IJ Scan Utility Lite, place up to 12 items.
- Positions of slanted items (10 degrees or less) are corrected automatically.

the diagonally striped area cannot be scanned.

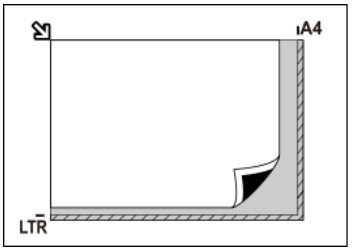

Important

- **Inkjet All-In-One printer:**

  For the portions in which items cannot be scanned, see Loading Originals.

- **Personal scanner:**

  For the portions in which items cannot be scanned, see Items You Can Place & How to Place Items.

Placing Documents (ADF (Auto Document Feeder))

Important

- Do not leave thick items on the platen when scanning from the ADF. May result in paper jam.
- Place and align documents of the same size when scanning two or more documents.
- For supported document sizes when scanning from the ADF, see Supported Originals.

1. Make sure any original has been removed from platen.

2. Open document tray (A).

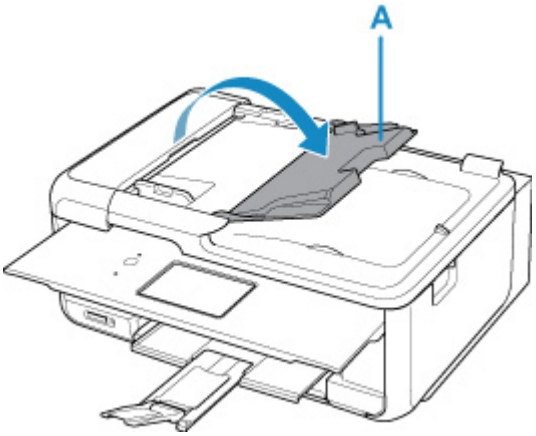

3. Slide the document guide (B) all the way out.

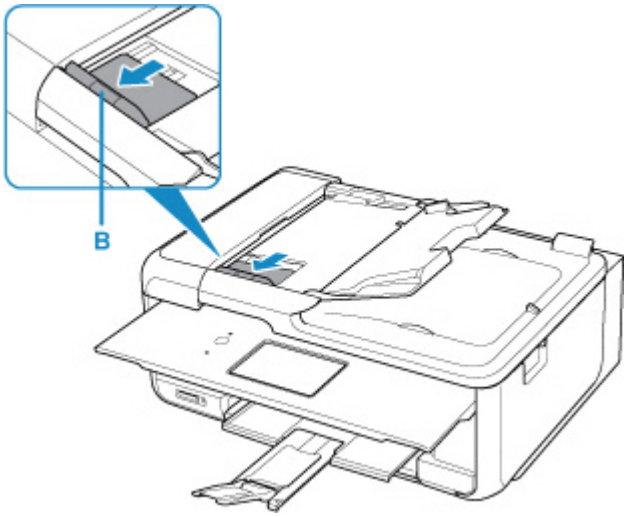

Note

- The location and number of document guides may vary depending on your model.

4. Load document with side to scan facing up in document tray.

   Insert the document until it stops.

5. Adjust document guide to match width of document.

   Do not slide the document guide too hard against the document. The document may not be fed properly.

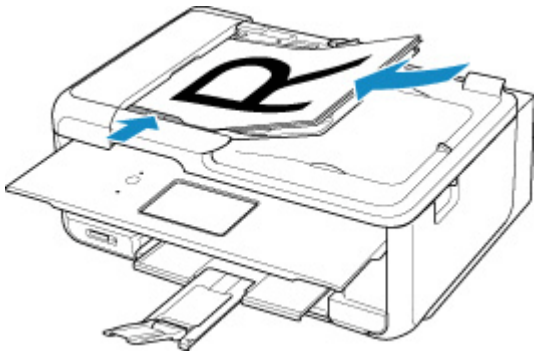

Note

- When scanning duplex documents, place the front sides facing up. They will not be scanned correctly if placed the other way around.

Placing Items (When Using Stand)

1. Place item on platen.

    1. Open the document cover.

    2. Place the item with the side to scan facing the platen, and then align it with the alignment mark.

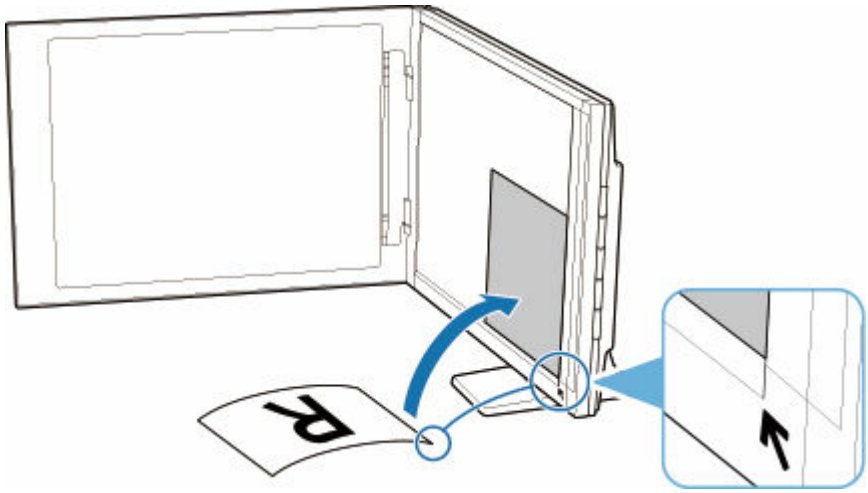

Important

- If you open the document cover wide, the scanner may fall over.
- Portions placed over (A) (0.094 inch (2.4 mm) from the left edge of the platen) or (B) (0.106 inch (2.7 mm) from the front edge) cannot be scanned.

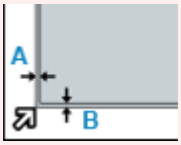

2. Gently close document cover.

While scanning, hold the document cover gently with your hand to keep it closed.

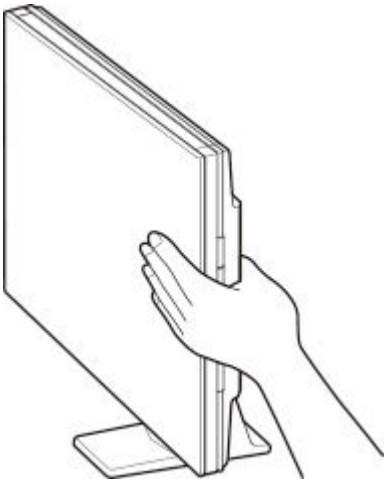

Important

- Keep these points in mind when using the scanner in the upright position.
  - Do not subject the scanner to vibration during operation. The correct image results may not be obtained (for example, images may blur).
  - The item type may not be detected automatically. In that case, specify the item type in IJ Scan Utility Lite and scan.

Frequently Asked Questions

Top 6

Loading Paper >

Network Connection Setup Guide

List of Support Codes for Printer Errors >

Network Communication Problems >

Ink Does Not Come Out >

Scan using the operation panel of the printer

Search by Category

Error

- List of Support Codes for Printer Errors
- When Error Occurred
- Message Is Displayed
- "1000" is displayed
- "1300" is displayed
- Disable notifications for "2114" error

Network

- Solve Network Troubles with The Printer's Diagnostic Functions
- Cannot Find Printer on Network (Windows/macOS)
- Easy Understanding Network Connections
- Cannot Proceed Beyond Printer Connection Screen (Cannot Find Printer Connected via USB)
- Connecting with Wireless Direct
- Printing Network Settings

Printing

- What to Do When Paper Is Jammed
- Printer Does Not Print
- Printout (Copy) Results Are Unsatisfactory
- Blurry or Fuzzy
- Inaccurate or Bleeding Colors
- Lines Are Misaligned/Distorted

Scan

- Scanning Problems (Windows)
- Scanner Does Not Work (Windows)
- ScanGear (Scanner Driver) Does Not Start (Windows)
- IJ Scan Utility Error Messages (Windows)
- ScanGear (Scanner Driver) Error Messages (Windows)
- Cannot Print (Scan) from Smartphone/Tablet

Other

- Searching Printer by IP Address or Host Name During Setup
- Failed to MP Drivers (Printer Driver) Installation (Windows)
- Updating MP Drivers (Printer Driver) in Network Environment (Windows)
- Replace Ink in Print Head
- Refilling Ink Tanks
- Repairing Your Printer

Questions not Listed Above

Error

- Cannot Use Previous Applications

Network

- Switching Printer's Connection to Network or Devices
- Network Key (Password) Unknown
- Cannot Remember Printer's Administrator Password
- Printer Cannot Be Used After Replacing Wireless Router or Changed Router Settings
- Message Appears on Computer During Setup
- Checking Network Information of Printer
- Restoring Printer's LAN Settings to Defaults
- USB Connection Problems
- Updating Printer Firmware

Printing

- Cannot Print Using AirPrint
- Printing (Copying) Stops
- Printer Does Not Pick Up or Feed the Paper/"No Paper" Error

Scan

- Scanning Problems (macOS)
- Scan Results Are Unsatisfactory (Windows)
- Scan Results Are Unsatisfactory (macOS)

Other

- Printer Does Not Turn On
- Maintenance
- Printer Turns Off Unexpectedly or Repeatedly
- Wrong Language Appears in LCD

Operation Problems

Network FAQ

Here are frequently asked questions on network. Select a connection method you are using, or you want to use.

Wi-Fi

Wireless Direct

Wi-Fi

Cannot Find Printer

- Cannot Find Printer on Network (Windows/macOS)
- Cannot Proceed Beyond Printer Connection Screen (Cannot Find Printer Connected via USB)
- Searching Printer by IP Address or Host Name During Setup
- Detect Same Printer Name
- Switching Printer's Connection to Network or Devices

Cannot Print or Connect

- Solve Network Troubles with The Printer's Diagnostic Functions
- Printer Cannot Be Used After Replacing Wireless Router or Changed Router Settings
- Connecting Printer and Wireless Router Using Easy Wireless (Easy WL) Connect
- Cannot Connect Smartphone/Tablet to Wireless Router
- WPS (Router Button) Connection
- Switching Printer's Connection to Network or Devices
- Cannot Find Printer on Network (Windows/macOS)

LAN Setting Tips/Changing LAN Settings

- Network Key (Password) Unknown
- Cannot Remember Printer's Administrator Password
- Checking Network Information of Printer
- Restoring Printer's LAN Settings to Defaults
- Checking Wireless Router Network Name (SSID) for Smartphone/Tablet
- Privacy Separator/SSID Separator/Network Separation Function
- Default Network Settings
- Switching Printer's Connection to Network or Devices
- Printing Network Settings
- Checking Status Code

Printing (Scanning) from Smartphone/Tablet

- Connecting Printer and Wireless Router Using Easy Wireless (Easy WL) Connect
- Cannot Connect Smartphone/Tablet to Wireless Router
- Checking Wireless Router Network Name (SSID) for Smartphone/Tablet
- Setting Up Using Smartphone/Tablet

- Cannot Print (Scan) from Smartphone/Tablet
- Downloading Canon PRINT Inkjet/SELPHY

Problems while Using Printer

- Message Appears on Computer During Setup
- Cannot Find Printer on Network (Windows/macOS)

Wireless Direct

Cannot Print or Connect

- Solve Network Troubles with The Printer's Diagnostic Functions
- Cannot Find Printer on Network (Windows/macOS)

LAN Setting Tips/Changing LAN Settings

- Network Key (Password) Unknown
- Cannot Remember Printer's Administrator Password
- Checking Network Information of Printer
- Restoring Printer's LAN Settings to Defaults
- Default Network Settings
- Printing Network Settings
- Switching Printer's Connection to Network or Devices
- Checking Status Code

Printing (Scanning) from Smartphone/Tablet

- Cannot Print (Scan) from Smartphone/Tablet
- Downloading Canon PRINT Inkjet/SELPHY

Problems while Using Printer

- Message Appears on Computer During Setup
- Cannot Find Printer on Network (Windows/macOS)

Network Communication Problems

- Cannot Find Printer on Network (Windows/macOS)
- Wireless Router Problems
- Printer Settings/Smartphone/Tablet Troubles for Network

Cannot Find Printer on Network (Windows/macOS)

- Cannot Find Printer on Network
- Cannot Proceed Beyond Printer Connection Screen (Cannot Find Printer Connected via USB)
- Searching Printer by IP Address or Host Name During Setup

Cannot Find Printer on Network

In the following cases, set up the printer again.

- When you buy a new computer or wireless router
- When you change the settings on your wireless router
- When the connection method (Wi-Fi / USB) of the printer is changed
- When you forget the administrator password of the printer

When you forget the administrator password of the printer, select **Settings** on HOME screen and **Device settings** > **Reset settings** > **Reset all** and redo setup to restore to default administrator password.

➡ Reset settings

For more on the setup procedure;

➡ Set Up

In Other Cases Than Above:

If the printer suddenly stops working, even though you have not changed the settings of the device or network to which it is connected, or if you cannot find the printer during the setup process, check and solve the problem, using Wi-Fi Connection Assistant. After the condition improves, redo the setup of the printer.

Wi-Fi Connection Assistant is a powerful solution tool for network problems.

Step1 Check Basic Items for Network.

Step2 Solve Problems, Using Wi-Fi Connection Assistant.

Step3 If the Solution Tool Does Not Solve the Problem.

Step1 : Check Basic Items for Network.

Check1 Check power status.

Check your printer and the network device (wireless router, etc.) are turned on.

If you are in the process of setting up, interrupt it and check if the wireless router (modem) is turned on and then check if the printer is turned on.

1. Check if network device such as router is turned on.

   If network devices are not turned on, turn on the power. If the network devices are on, turn them off and on again.

It may take a while for the network device to become ready for use once they are turned on.

Proceed once the network device such as router is ready for use.

2. Check if printer is turned on

   If printer is not turned on, turn on the power. If the printer is on, turn it off and on again.

Proceed once you complete checking the power status above.

Check2 Check PC network connection.

If your computer and network devices (wireless router, etc.) are fully configured, your computer is ready to connect to the network.

1. Check the settings of the network device (wireless router, etc.).

   Connect to the Internet and see if you can browse any web page. If you cannot view web pages on your computer, check wireless router network connection settings, such as IP address filtering, MAC address filtering, and DHCP function.

   To check the network name (SSID) of the wireless router the printer is connected to, print the network settings.

   ➡ Printing Network Settings

   Note

   - Depending on the wireless router, note that different network name (SSID) is assigned for a bandwidth (2.4 GHz or 5 GHz) or its usage (for PC or game machine), using alphanumeric characters at the end of network name (SSID).
   - For more on checking the settings of the wireless router, refer to the instruction manual supplied with the wireless router or contact the manufacturer.

   If you use an encryption key, specify it for the network name (SSID) you are using. For details, see Setting an Encryption Key.

2. Check PC network connection.

   For the procedures, refer to the instruction manual supplied with the computer, or contact the manufacturer.

Once you complete setting up the wireless router and your computer, configure the settings on your computer in order to view web pages, using the information of the wireless router.

Proceed once you complete checking the network connection above.

Check3 Check printer's network settings.

Make sure the (Wi-Fi) icon is displayed on the upper left corner of HOME screen.

If (Wi-Fi not connect) icon is displayed.

(Wi-Fi not connect) icon indicates that the wireless router and the printer are not connected. Check the setting of printer. Reconsider the location of the wireless router and the printer in the next check.

If Easy wireless connect button (Easy wireless connect) is on.

"Easy wireless connect" is waiting for setup. Connect a device to the printer with the application on computer, smartphone or tablet.

If only (Wi-Fi off) or (Wireless direct) icon is displayed.

The printer is not set to use Wi-Fi.

Select **Settings** on HOME screen > **Device settings** > **LAN settings** > **Wi-Fi** in this order, and select **Enable** for **Advanced mode**.

Check4 Check location of wireless router.

Make sure the printer is not placed too far away from the wireless router.

The printer can be up 50 m (164 ft.) from the wireless router indoors if unobstructed. Make sure the printer is close enough to the wireless router to be used.

Place the printer and wireless router where there are no obstacles between them. Wireless communication between different rooms or floors is generally poor. Wireless communication can be impeded by building materials containing metal or concrete. If the printer cannot communicate with the computer over a Wi-Fi due to a wall, place the printer and the computer in the same room.

In addition, if a device like a microwave oven that emits radio waves of the same frequency bandwidth as a wireless router is nearby, it may cause interference. Place the wireless router as far away from interference sources as possible.

Step2 : Solve Problems, Using Wi-Fi Connection Assistant.

Diagnose and repair the network connections using Wi-Fi Connection Assistant.

Download Wi-Fi Connection Assistant from the below page, and install it on your computer.

➡ Checking Printer Connection Status Using Wi-Fi Connection Assistant

Refer to below in regard to starting up Wi-Fi Connection Assistant.

- **For Windows:**

  ➡ Starting Up Wi-Fi Connection Assistant

- **For macOS:**

  ➡ Starting Up Wi-Fi Connection Assistant

Step3 : If the Solution Tool Does Not Solve the Problem.

Check1 Make sure security software's firewall is off.

If your security software's firewall is on, a message may appear warning you that Canon software is attempting to access the network. If this warning message appears, set security software to always allow access.

If you are using any programs that switch between network environments, check their settings. Some programs use a firewall by default.

Check2 If printer is connected to AirPort Base Station via LAN, make sure you use alphanumeric characters for network name (SSID). (macOS)

If characters other than single-byte alphanumeric characters are used in the network name (SSID), you will not be able to connect correctly. Change the network name (SSID) to single-byte alphanumeric characters only.

Check3 Solve network troubles with the printer's diagnostic functions.

See below.

➡ Solve Network Troubles with The Printer's Diagnostic Functions

Cannot Proceed Beyond Printer Connection Screen (Cannot Find Printer Connected via USB)

If you cannot proceed beyond the **Printer Connection** screen, check the following.

Check1 Make sure USB cable is securely plugged in to printer and computer.

Connect the printer and the computer using a USB cable as the illustration below. The USB port is located at the back of the printer.

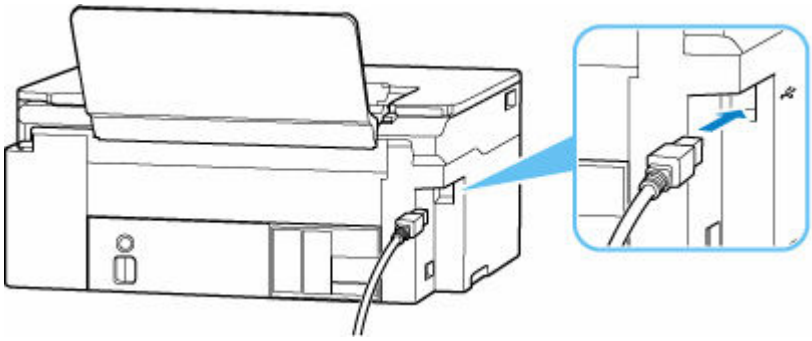

Important

- Check the orientation of the "Type-B" connector and connect to the printer. For details, refer to the instruction manual supplied with the USB cable.

Check2 Follow procedure below to connect printer and computer again.

Important

- For macOS, make sure the lock icon is on the lower left of the **Printers & Scanners** screen.

  If the icon (locked) is displayed, click the icon to unlock. (The administrator name and the password are necessary to unlock.)

1. Unplug USB cable from printer and computer and connect it again.
2. Make sure no printer operation is in progress and turn off.
3. Turn on printer.

Check3 Follow the steps below to install MP Drivers (Printer Driver) again.

1. Download the latest MP Drivers (Printer Driver).

2. Turn off printer.

3. Restart computer.

   After restarting, install the latest MP Drivers (Printer Driver) downloaded in step 1.

Important

- When installing the MP Drivers (Printer Driver), make sure you select the correct printer name.
- For Windows:

  To restart your computer, choose **Restart** instead of **Shut down**.

Wireless Router Problems

- Network Key (Password) Unknown
- Checking Wireless Router SSID/Key
- Printer Cannot Be Used After Replacing Wireless Router or Changed Router Settings
- WPS (Router Button) Connection
- Privacy Separator/SSID Separator/Network Separation Function

Network Key (Password) Unknown

Use the Wi-Fi Connection Assistant to diagnose and repair network status.

Select the link below to download Wi-Fi Connection Assistant and install it.

➡ Checking Printer Connection Status Using Wi-Fi Connection Assistant

See below for starting up Wi-Fi Connection Assistant

- **For Windows:**

  ➡ Starting Up Wi-Fi Connection Assistant

- **For macOS:**

  ➡ Starting Up Wi-Fi Connection Assistant

If the problem persists after diagnosis and repair with Wi-Fi Connection Assistant, check the following items.

➡ WPA/WPA2/WPA3 Key Set for Wireless Router Unknown, Cannot Connect
➡ Setting an Encryption Key

Q WPA/WPA2/WPA3 Key Set for Wireless Router Unknown, Cannot Connect

A

For more on setting up a wireless router, see the instruction manual provided with the wireless router or contact its manufacturer. Make sure your computer can communicate with the wireless router.

Q Setting an Encryption Key

A

Select the encryption containing WPA2.

Note

- The factory default of wireless router supporting WPA3 may be set to WPA3.

Make sure your computer can communicate with the wireless router using the settings you have selected. For more on setting up a wireless router, see the instruction manual provided with the wireless router or contact its manufacturer.

- **Using WPA2/WPA3 (Windows)**

  The authentication method, Wi-Fi password, and dynamic encryption type must be identical among the wireless router, the printer, and your computer.

  Enter the Wi-Fi password configured on the wireless router.

Either TKIP (basic encryption) or AES (secure encryption) is selected automatically as the dynamic encryption method.

For details, see If WPA/WPA2 Details Screen Appears.

Note

- This printer supports the following.
  - WPA-PSK (WPA-Personal)
  - WPA2-PSK (WPA2-Personal)
  - WPA3-SAE (WPA3-Personal)
- Some printers support IEEE802.1X/EAP (WPA/WPA2/WPA3 Enterprise). To configure IEEE802.1X/EAP (WPA/WPA2/WPA3 Enterprise), you also need to configure the authentication (Radius) server.

  Contact the network administrator for more information.
- This web page contains information about several models. Depending on the specifications of the printer you are using, some of the features described (scanner/copy, etc.) may not apply.

  For details about the functions of your printer, see Specifications.

Printer Cannot Be Used After Replacing Wireless Router or Changed Router Settings

When you replace a wireless router, redo the network setup for the printer according to the replaced one.

Refer to Setup Guide to setup.

Note

- Wi-Fi Connection Assistant allows you to diagnose and repair the network status.

  Select the link below to download Wi-Fi Connection Assistant and install it.

  ➡ Checking Printer Connection Status Using Wi-Fi Connection Assistant

  See below for starting up Wi-Fi Connection Assistant.

  – **For Windows:**

    ➡ Starting Up Wi-Fi Connection Assistant

  – **For macOS:**

    ➡ Starting Up Wi-Fi Connection Assistant

If this does not solve the problem, see below.

➡ Cannot Communicate with Printer After Enabling MAC/IP Address Filtering or Encryption Key on Wireless Router
➡ With Encryption On, Cannot Communicate with Printer After Changing Encryption Type at Wireless Router

Cannot Communicate with Printer After Enabling MAC/IP Address Filtering or Encryption Key on Wireless Router

Check1 Check wireless router setting.

To check the wireless router setting, see the instruction manual provided with the wireless router or contact its manufacturer. Make sure the computer and the wireless router can communicate with each other under this setting.

Check2 If filtering MAC addresses or IP addresses at wireless router, check that MAC addresses or IP addresses for computer, network device, and printer are registered.

Check3 If using WPA/WPA2/WPA3 key or a password, make sure encryption key for computer, network device, and printer matches key set for wireless router.

The length or format of the Wi-Fi password and authentication method must be identical among the wireless router, the printer, and your computer.

For details, see Setting an Encryption Key.

Note

- Some printers support IEEE802.1X/EAP (WPA/WPA2/WPA3 Enterprise). To configure IEEE802.1X/EAP (WPA/WPA2/WPA3 Enterprise), you also need to configure the authentication (Radius) server.

  Contact the network administrator for more information.

- This web page contains information about several models. Depending on the specifications of the printer you are using, some of the features described (scanner/copy, etc.) may not apply.

  For details about the functions of your printer, see Specifications.

Q With Encryption On, Cannot Communicate with Printer After Changing Encryption Type at Wireless Router

A

If the printer cannot communicate with the computer after you change the encryption type for the wireless router, make sure the encryption type and passkey or password for the computer matches that of the wireless router.

➡ Cannot Communicate with Printer After Enabling MAC/IP Address Filtering or Encryption Key on Wireless Router

Printer Settings/Smartphone/Tablet Troubles for Network

- Solve Network Troubles with The Printer's Diagnostic Functions
- Checking Network Information of Printer
- Checking Status Code
- Printing Network Settings
- Restoring Printer's LAN Settings to Defaults
- Default Network Settings
- Connecting with Wireless Direct

Solve Network Troubles with The Printer's Diagnostic Functions

- **If the printer and wireless router are connected or the printer and computer are connected by USB cable but you cannot print:**

  ➡ Change to Offline (Windows)

- **In other cases than above:**

  ➡ Cannot Find Printer on Network/Cannot Print
  ➡ Cannot Connect to Printer through Wireless Direct

Q Cannot Find Printer on Network/Cannot Print

A

Printing Out Network Settings Information:

Follow the procedure below to print out the network settings information.

Step1 Check that printer and wireless router are turned on.

Turn the wireless router back on.

Wait about five minutes and then turn the printer back on.

Step2 Check your devices (e.g. computer/smartphone/tablet) are connected to Internet.

Make sure that devices and the wireless router are connected to via Wi-Fi, and that the Internet can be used without problems.

Step3 Make sure the printer's Wi-Fi setting is enabled and the icon is displayed.

Step4 Move the printer and device (computer/smartphone/tablet) closer to the wireless router.

Wireless communication quality deteriorates if the printer or devices are too far from the wireless router.

Step5 Print out network settings information

Print out the network settings information on your printer.

➡ Printing Network Settings

Checking Printed Network Settings Information:

From the printed network settings information, check the entries in item "2-2"

C-0

It is connected correctly. If, nevertheless, the printer is not found on the network or printing is not possible, check the following items.

Note

- If codes other than "C-0" are displayed at the same time in the item "2-2" see also the correspondence of the other codes.

Check1 Check that security software's firewall is off.

A message may appear warning you that Canon software is attempting to access the network. If this warning message appears, set the security software to always allow access.

Quit the security software and make sure that the printer is recognized and ready to use. If so, the cause is the firewall setting. Change the firewall settings so that the printer is recognized and ready to use. For details, contact the manufacturer of the security software.

If you are using any programs that switch between network environments, check their settings. Some programs use a firewall by default.

Check2 Does network name (SSID) of printer match network name (SSID) setting of wireless router that communicates?

Check the "3-2-6" item in the printed network settings information and the network name (SSID) of the wireless router you want to connect to. If they are not matched, check the SSID and password of the wireless router you want to connect to, and then setup manually.

Check3 Is privacy separator, SSID separator, or Network separation function enabled on wireless router?

If it is enabled, disable these functions before performing the setup. To check the settings of the wireless router, refer to the instruction manual provided with it or contact its manufacturer.

Check4 If MP Drivers (Printer Driver) are not installed, install them. (Windows)

Install the MP Drivers (Printer Driver).

➡ Set Up

C-1

The printer's Wi-Fi setting is disabled. (You can also check if the Wi-Fi icon does not appear on the printer's screen.)

Enable the Wi-Fi setting in the printer's settings screen.

C-3

No IP address is assigned. (You can also check that the item "3-2-12" in the printed network settings information is blank.)

Check the following items.

Check1 Is printer set to obtain an IP address automatically, or is wireless router requesting manual addressing?

Refer to the wireless router's manual to enable DHCP (auto-acquisition) settings on the wireless router or to set a valid IP address on the printer.

Check2 When you set printer's IP address manually, correct IP address may not be set.

Check the network name (SSID) and the password of the wireless router you want to connect to, the IP address applicable range, and then enter the appropriate IP address on the printer side. If you are unsure, set the printer's IP address to automatic (DHCP).

C-5

Unable to connect to the specified network. Check the following items.

Check1 Check status of printer and network device (e.g. wireless router) and your computer/smartphone/tablet.

Communication with a wireless router must be tuned to either the 2.4 GHz or 5 GHz frequency band. The network name (SSID) of the 2.4 GHz frequency band and the network name (SSID) of the 5 GHz frequency band cannot be used in combination.

Check the network name (SSID) set for the printer, and match it with the network name (SSID) of the correct frequency band of the Wi-Fi router.

Check2 Password on your wireless router may not match password you entered.

Passwords are case sensitive.

Enter the password correctly.

Check3 Monitor signal status and move printer and wireless router as necessary.

- Place the printer and wireless router where there are no obstacles between them. Wireless communication between different rooms or floors is generally poor.
- Wireless communication can be impeded by building materials containing metal or concrete. If the printer cannot communicate with the computer over a Wi-Fi due to a wall, place the printer and the computer in the same room.
- After changing the installation location, print out the network settings information again and check the status of the signal. Compare with the value in section "3-2-1" in the printed network settings information to determine the installation location.

Check4 Check wireless channel number of Wi-Fi you are using on computer.

Make sure that the wireless channel number on the wireless router is included in the wireless channel number you checked. If the wireless channel number set for the wireless router is not included, change the wireless channel number of the wireless router.

Check5 In case of Wi-Fi connection, check if computer that can be accessed by wireless router is restricted.

The wireless router settings may be limiting the number of devices that can be connected at the same time. Remove or relax the restrictions.

To check the settings of the wireless router, refer to the instruction manual provided with it or contact its manufacturer.

Note

- To check the MAC address or IP address of your computer, see Checking Computer IP Address or MAC Address.

Check6 If problem occurs only when wireless router is in energy-saving mode, turn off energy-saving mode of wireless router.

If the problem seems to occur suddenly, it may be resolved by updating the wireless router firmware (e.g. update interval of a key, problems of DHCP update interval, etc.). For details, refer to the wireless router's instruction manual.

Check7 If printer is connected to AirPort Base Station via LAN, make sure you use alphanumeric characters for network name (SSID). (macOS)

C-4

No default gateway is set.

When you set the IP address of the printer manually, enter a valid default gateway IP address. If you don't know the default gateway, set the IP address to automatic.

C-7

There may be a problem with the signal.

Check the following items.

Check Monitor signal status and move printer and wireless router as necessary.

- Place the printer and wireless router where there are no obstacles between them. Wireless communication between different rooms or floors is generally poor.
- Wireless communication can be impeded by building materials containing metal or concrete. If the printer cannot communicate with the computer over a Wi-Fi due to a wall, place the printer and the computer in the same room.
- After changing the installation location, print out the network settings information again and check the status of the signal. Compare with the value in section "3-2-1" in the printed network settings information and place the printer in the location with a higher value.

Note

- In some cases, "C-7" and "C-9" are displayed at the same time. In that case, refer to both items.

C-8

Too many clients are connected.

Wireless Direct does not allow more than 5 devices to be connected.

If you want to connect additional devices to the printer, unplug any devices that are not in use before adding them.

C-9

The noise level is high and does not differ from the signal level due to various devices other than the printer.

- If devices (microwave oven, external hard disk drive, and other USB 3.0 devices) that emit radio waves of the same frequency bandwidth as a wireless router is nearby, it may cause interference. Place the printer and the wireless router as far away from interference sources as possible.
- After you change the location of the printer, check the signal quality. Compare the value of "3-2-2" in the network settings information and place the printer in the location with a higher value.

Note

- In some cases, "C-7" and "C-9" are displayed at the same time. In that case, refer to both items.

C-10

No IP address is assigned by the wireless router.

Check the following items.

Check1 Password on your wireless router may not match password you entered.

Passwords are case sensitive.

Enter the password correctly.

Check2 Set up printer again and reconnect to Wi-Fi.

Check3 Check DHCP on wireless router. If DHCP is off, set it on.

To check the settings of the wireless router, refer to the instruction manual provided with it or contact its manufacturer.

C-11

The network name (SSID) remains the default value (The network name (SSID) has not been set). Check the network name (SSID) of the wireless router.

Verify the network name (SSID) and password of the wireless router you want to connect to, and then set it up manually.

Note

- Wi-Fi Connection Assistant allows you to diagnose and repair the network status.

  Select the link below to download Wi-Fi Connection Assistant and install it.

  ➡ Checking Printer Connection Status Using Wi-Fi Connection Assistant

  See below for starting up Wi-Fi Connection Assistant.

  – **For Windows:**

    ➡ Starting Up Wi-Fi Connection Assistant

– **For macOS:**

➡ Starting Up Wi-Fi Connection Assistant

Q Cannot Connect to Printer through Wireless Direct

A

Check1 Check power status of printer and other devices (e.g. computer/smartphone/tablet).

Turn on the printer or devices.

If the power is already turned on, cycle the power switch.

Check2 Check settings of your device (e.g. computer/smartphone/tablet).

Make sure Wi-Fi is enabled on your device.

For details, refer to the device's instruction manual.

Check3 Print out network settings information.

See "Step1" to "Step5" in Cannot Find Printer on Network/Cannot Printing.

In the printed network settings information, check if the item "2-2" is not "C-8". If this is the case, the number of connected printers is too many.

Wireless Direct does not allow more than 5 devices to be connected.

When you want to connect additional devices, disconnect any devices that are not in use before adding them.

Check4 Check that printer is selected as connection for various devices (e.g. computer/smartphone/tablet).

Select the network name (SSID) for Wireless Direct specified for the printer as the connection destination for devices.

Check the destination on your device.

For details, refer to your device's instruction manual or visit the manufacturer's website.

To check the network name (SSID) for Wireless Direct specified for the printer, display it using the operation panel of the printer or print out the network settings information of the printer.

- Display on the LCD.

  ➡ LAN settings

- Print the network settings.

  ➡ Printing Network Settings

Check5 Check that Wireless Direct password set for printer is entered correctly.

To check the password specified for the printer, display it using the operation panel of the printer or print out the network settings information of the printer.

- Display on the LCD.

  ➡ LAN settings

- Print the network settings.

  ➡ Printing Network Settings

Check6 Check that printer is not placed too far away from device.

If the distance between the printer and the device is too far, wireless communication becomes poor. Place the printer and the device close to each other.

Checking Network Information of Printer

- Checking Printer IP Address or MAC Address
- Checking Computer IP Address or MAC Address
- Checking Communication Between the Computer, the Printer, and the Wireless Router
- Checking Network Setting Information

Q Checking Printer IP Address or MAC Address

A

To check the printer's IP Address or MAC address, display it using the operation panel of the printer or print it out.

- Display on the LCD.
  - LAN settings
- Print the network settings.
  - Printing Network Settings

For Windows, you can check the network setting information on the computer screen.

Canon Wi-Fi Connection Assistant Screen

Q Checking Computer IP Address or MAC Address

A

To check the IP Address or MAC address of your computer, follow the instructions below.

- **For Windows:**

  1. Select **Command Prompt** from **Start**.
  2. Enter "ipconfig/all" and press **Enter**.

     The IP address and MAC address of your computer appear. If your computer is not connected to a network, the IP address does not appear.

- **For macOS:**

  1. Select **System Preferences** from Apple menu, and then click **Network**.
  2. Make sure network interface used by computer is selected, and then click **Advanced**.

     Make sure **Wi-Fi** is selected as network interface.
  3. Click **TCP/IP** to check the IP address, or click **Hardware** to check the MAC address.

Q Checking Communication Between the Computer, the Printer, and the Wireless Router

A

Perform a ping test to check if communication is taking place.

- **For Windows:**

  1. Select **Command Prompt** from **Start**.

  2. Type the ping command and press **Enter**.

     The ping command is as follows: ping XXX.XXX.XXX.XXX

     "XXX.XXX.XXX.XXX" is the IP address of the target device.

     If communication is taking place, a message like the one shown below appears.

     Reply from XXX.XXX.XXX.XXX: bytes=32 time=10ms TTL=255

     If **Request timed out** appears, communication is not taking place.

- **For macOS:**

  1. Start **Network Utility** as shown below.

     Select **Computer** from **Go** menu of Finder, double-click **Macintosh HD** > **System** > **Library** > **CoreServices** > **Applications** > **Network Utility**.

  2. Click **Ping**.

  3. Make sure **Send only XX pings** (XX are numbers) is selected.

  4. Enter IP address of target printer or target wireless router in **Enter the network address to ping**.

  5. Click **Ping**.

     "XXX.XXX.XXX.XXX" is the IP address of the target device.

     A message such as the following appears.

     64 bytes from XXX.XXX.XXX.XXX: icmp_seq=0 ttl=64 time=3.394 ms

     64 bytes from XXX.XXX.XXX.XXX: icmp_seq=1 ttl=64 time=1.786 ms

     64 bytes from XXX.XXX.XXX.XXX: icmp_seq=2 ttl=64 time=1.739 ms

     --- XXX.XXX.XXX.XXX ping statistics ---

     3 packets transmitted, 3 packets received, 0% packet loss

     If "100% packet loss" appears, communication is not taking place. Otherwise, computer is communicating with target device.

Checking Network Setting Information

To check the printer's network settings information, display it using the operation panel of the printer or print it out.

Display on the LCD.

➡ LAN settings

Print the network settings.

➡ Printing Network Settings

Printing Network Settings

Use the operation panel to print the printer's current network settings.

Important

- The network settings printout contains important information about your network. Handle it with care.

1. Check that printer is turned on.
2. Load three or more sheets of A4 or Letter-sized plain paper.
3. Select **Settings** on HOME screen and press **OK** button.
4. Select **LAN settings** and press **OK** button.
5. Select **Print details** and press **OK** button.
6. Select **Yes** and press **OK** button.
7. Check the message is displayed and press **OK** button.
8. When the confirmation screen for printing passwords appears, select **ON** or **OFF** and press **OK** button.

   The printer starts printing the network setting information.

The following information on the printer's network setting is printed out. (Some setting values are not displayed depending on the printer settings.)

Item Number	Item	Description	Setting
1	Product Information	Product information	–
1-1	Product Name	Product name	XXXXXXXX
1-2	ROM Version	ROM version	XXXXXXXX
1-3	Serial Number	Serial number	XXXXXXXX
2	Network Diagnostics	Network diagnostics	–
2-1	Diagnostic Result	Diagnostic result	XXXXXXXX

2-2	Result Codes	Result codes	XXXXXXXX
2-3	Result Code Details	Result code details	See Solve Network Troubles with The Printer's Diagnostic Functions to check details on the diagnostic result and result codes.
3	Wireless LAN	Wireless LAN	Enable/Disable
3-2	Infrastructure	Infrastructure	Enable/Disable
3-2-1	Signal Strength	Signal strength	0 to 100 [%]
3-2-2	Link Quality	Link quality	0 to 100 [%]
3-2-3	Frequency	Frequency	2.4/5 (GHz)
3-2-4	MAC Address	MAC address	XX:XX:XX:XX:XX:XX
3-2-5	Connection	Connection status	Active/Inactive
3-2-6	SSID	SSID	Wireless LAN network name (SSID)
3-2-7	Channel	Channel	XXX (1 to 13, 36, 40, 44, 48, 52, 56, 60, 64, 100, 104, 108, 112, 116, 120, 124, 128, 132, 136, 140, 149, 153, 157, 161, 165)
3-2-8	Encryption	Encryption method	none/TKIP/AES
3-2-10	Authentication	Authentication method	none/auto/open/shared/WPA-PSK/WPA2-PSK/WPA3-SAE
3-2-11	TCP/IPv4	TCP/IPv4	Enable
3-2-12	IP Address	IP address	XXX.XXX.XXX.XXX
3-2-13	Subnet Mask	Subnet mask	XXX.XXX.XXX.XXX
3-2-14	Default Gateway	Default gateway	XXX.XXX.XXX.XXX
3-2-15	TCP/IPv6	TCP/IPv6	Enable/Disable
3-2-16	Link Local Address	Link local address	XXXX:XXXX:XXXX:XXXX XXXX:XXXX:XXXX:XXXX
3-2-17	Link Local Prefix Length	Link local prefix length	XXX
3-2-18	Stateless Address1	Stateless address 1	XXXX:XXXX:XXXX:XXXX XXXX:XXXX:XXXX:XXXX
3-2-19	Stateless Prefix Length1	Stateless prefix length 1	XXX
3-2-20	Stateless Address2	Stateless address 2	XXXX:XXXX:XXXX:XXXX XXXX:XXXX:XXXX:XXXX

3-2-21	Stateless Prefix Length2	Stateless prefix length 2	XXX
3-2-22	Stateless Address3	Stateless address 3	XXXX:XXXX:XXXX:XXXX XXXX:XXXX:XXXX:XXXX
3-2-23	Stateless Prefix Length3	Stateless prefix length 3	XXX
3-2-24	Stateless Address4	Stateless address 4	XXXX:XXXX:XXXX:XXXX XXXX:XXXX:XXXX:XXXX
3-2-25	Stateless Prefix Length4	Stateless prefix length 4	XXX
3-2-26	Default Gateway1	Default gateway 1	XXXX:XXXX:XXXX:XXXX XXXX:XXXX:XXXX:XXXX
3-2-27	Default Gateway2	Default gateway 2	XXXX:XXXX:XXXX:XXXX XXXX:XXXX:XXXX:XXXX
3-2-28	Default Gateway3	Default gateway 3	XXXX:XXXX:XXXX:XXXX XXXX:XXXX:XXXX:XXXX
3-2-29	Default Gateway4	Default gateway 4	XXXX:XXXX:XXXX:XXXX XXXX:XXXX:XXXX:XXXX
3-2-33	IPsec	IPsec setting	Active/Inactive
3-2-34	Security Protocol	Security method	ESP/ESP & AH/AH/Blank (Not selected)
3-2-35	Wireless LAN DRX	Discontinuous reception (wireless LAN)	Enable/Disable
3-3	Wireless Direct/Access Point Mode	Operation mode for Wireless Direct	Enable/Disable
3-3-1	MAC Address	MAC address	XX:XX:XX:XX:XX:XX
3-3-2	Connection	Connection status	Active/Inactive
3-3-3	SSID	SSID	Wireless Direct network name (SSID)
3-3-4	Password	Password	Wireless Direct password
3-3-5	Channel	Channel	3,6,36,40
3-3-6	Encryption	Encryption method	AES
3-3-7	Authentication	Authentication method	WPA2-PSK
3-3-8	TCP/IPv4	TCP/IPv4	Enable
3-3-9	IP Address	IP address	XXX.XXX.XXX.XXX

3-3-10	Subnet Mask	Subnet mask	XXX.XXX.XXX.XXX
3-3-11	Default Gateway	Default gateway	XXX.XXX.XXX.XXX
3-3-12	TCP/IPv6	TCP/IPv6	Enable/Disable
3-3-13	Link Local Address	Link local address	XXXX:XXXX:XXXX:XXXX XXXX:XXXX:XXXX:XXXX
3-3-14	Link Local Prefix Length	Link local prefix length	XXX
3-3-15	IPsec	IPsec setting	Active/Inactive
3-3-16	Security Protocol	Security method	ESP/ESP & AH/AH/Blank (Not selected)
3-3-17	Wireless LAN DRX	Discontinuous reception (wireless direct)	Disable
3-3-18	Frequency	Wireless Direct frequency	2.4/5 (GHz)
5	Other Settings	Other settings	–
5-1	Printer Name	Printer name	Printer name
5-2	Wireless Direct Dev-Name	Device name for wireless direct	Device name for wireless direct
5-4	WSD Printing	WSD printing setting	Enable/Disable
5-5	WSD Timeout	Timeout	1/5/10/15/20 [min]
5-6	LPD Printing	LPD printing setting	Enable/Disable
5-7	RAW Printing	RAW printing setting	Enable/Disable
5-9	Bonjour	Bonjour setting	Enable/Disable
5-10	Bonjour Service Name	Bonjour service name	Bonjour service name
5-11	LLMNR	LLMNR setting	Enable/Disable
5-12	SNMP	SNMP setting	Enable/Disable
5-13	PictBridge Commun.	PictBridge Communication	Enable/Disable
5-14	DNS Server	Obtain DNS server address automatically	Auto/Manual
5-15	Primary Server	Primary server address	XXX.XXX.XXX.XXX
5-16	Secondary Server	Secondary server address	XXX.XXX.XXX.XXX

5-17	Proxy Server	Proxy server setting	Enable/Disable
5-18	Proxy Address	Proxy address	XXXXXXXXXXXXXXXXXXXX
5-19	Proxy Port	Proxy port specification	1 to 65535
5-20	Cert. Fingerprt(SHA-1)	Certificate finger-print(SHA-1)	xxxxxxxx xxxxxxxx xxxxxxxx xxxxxxxx xxxxxxxx
5-21	Cert. Fin-gerprt(SHA-256)	Certificate finger-print(SHA-256)	xxxxxxxx xxxxxxxx xxxxxxxx xxxxxxxx xxxxxxxx xxxxxxxx xxxxxxxx xxxxxxxx
7	Web Services	Web Services	-
7-1	Unsent Usage Logs	Number of unsent us-age logs	0 to 200
7-2	Usage Log Last Sent	Last date when usage log was sent	XXXXXXXX
7-3	Web Service Status	Registration status	Not set/Disabled/Registration pending/Registered
7-4	Log Transmission Sta-tus	Transmission result	Not activated/Processing/Server error/Connection er-ror/Timeout error/Error/Awaiting server response/Active

("XX" represents alphanumeric characters.)

Restoring Printer's LAN Settings to Defaults

Important

- Initialization erases all network settings on the printer, making printing/scanning operation from a computer over a network impossible. To use the printer over a network again after restoring it to the factory defaults, refer to Setup Guide and redo setup.

Initialize the network setting using the printer's operation panel.

➡ Reset settings

Default Network Settings

LAN Connection Defaults

Item	Default
Network name(SSID)	BJNPSETUP
Wi-Fi security	Disable
IP address (**IPv4**)	**Auto setup**
IP address (**IPv6**)	Auto setup
Set printer name*	XXXXXXXXXXXX
Enable/disable IPv6	**Enable**
Enable/disable WSD	**Enable**
Timeout setting (WSD)	**15 min.**
Enable/disable Bonjour	**Enable**
Bonjour service name	Canon G3070 series
LPR protocol setting	**Enable**
RAW protocol	**Enable**
LLMNR	**Enable**
Wi-Fi DRX setting	**Enable**
2.4GHz/5GHz Switch	2.4GHz

("XX" represents alphanumeric characters.)

* Default value depends on printer. To check value, use operation panel.

➡ LAN settings

Wireless Direct Defaults

Item	Default
Network name(SSID)	DIRECT-abXX-G3070series *1

Password	YYYYYYYYYY *2
Security method	**WPA2-PSK (AES)**
Confirm connection request	Displayed

*1 "ab" is specified at random and "XX" represents last two digits of printer's MAC address. (The value is specified when the printer is turned on for the first time.)

*2 The password is specified automatically when the printer is turned on for the first time.

Connecting with Wireless Direct

You can connect devices (e.g. computer, smartphone, or tablet) to the printer by two methods below.

- Wireless connection (connecting devices via a wireless router)
- Direct wireless connection (connecting devices directly without a wireless router)

This section describes Wireless Direct, which allows you to print by connecting the devices to the printer directly.

- **Connecting**

  ➡ Connecting a smartphone/tablet/computer to the printer

- **Changing settings**

  ➡ Changing Wireless Direct Setting

Important

- You can connect up to 5 devices to the printer at the same time with Wireless Direct.
- Check the usage restrictions and connect the printer to the Wireless Direct.

  ➡ Restrictions

Connecting a smartphone/tablet/computer to the printer

1. Enable Wi-Fi function on smartphone/tablet/computer.

   Enable Wi-Fi in the Settings menu on your smartphone/tablet/computer.

   For instructions on enabling the Wi-Fi function, refer to the instruction manual for your smartphone/tablet/computer.

2. Select **Settings** on HOME screen and press **OK** button.

3. Select **LAN settings** and press the **OK** button.

4. Select **Wireless Direct** and press the **OK** button.

5. Select **Connect to smartphone** and press the **OK** button.

6. To connect with an iPhone/iPad, select **iPhone/iPad**. To connect with an Android device, select **Android device**. To connect with a non-iPhone/iPad, select **Others**.

   - **iPhone/iPad**

1. Select **QR code** and press the **OK** button.
2. Scan the displayed QR code with the iPhone/iPad standard camera app.

   The iPhone/iPad is connected to the printer.

   Note

   - If the QR code cannot be read, press the **Back** button and connect the printer from **Connect to smartphone** > **Others**.

- **Android device**
  1. Select **QR code** and press the **OK** button.
  2. Scan the displayed QR code with the Android device in one of the following ways.
     - Select network and Wi-Fi on the setting of Android device. Select **QR code** icon to the right of the **Add network** at the bottom of the list of Wi-Fi connections and scan the QR code.
     - Scan the displayed QR code with the Android standard camera app.
     - Scan the displayed QR code with a QR code reading app.

     The Android device is connected to the printer.

     Note

     - Wireless Direct using QR code can be used with Android 5.0 or later.
     - It is available in Android 10 or later to scan QR code from setting and read QR code with the Android standard camera.
     - Depending on the smartphone/tablet, QR code may not be readable.
     - If the QR code cannot be read, press the **Back** button and connect the printer from **Connect to smartphone** > **Others**.

- **Others**
  1. Select **Next** and press the **OK** button.

     Network name(SSID) and **Password** are displayed.

     Note

     - To show the password, select **ON**. To hide the password, select **OFF**.
     - The password is required when connecting smartphone/tablet/computer to the printer.

  2. Select "DIRECT-XXXX-G3070series" ("X" represents alphanumeric characters) on your smartphone/tablet/computer.
  3. Enter **Password** on smartphone/tablet/computer.

     The smartphone/tablet/computer is connected to the printer.

     Note

     - If the printer is set to display a confirmation screen in **Confirm connection request** of Changing Wireless Direct Setting, when the wireless direct compatible device connects to the printer, a confirmation screen asking for permission to connect is displayed on the LCD.

Make sure the name on the LCD is the same as that of your wireless communication device and select **Yes**.

You can print from your smartphone or tablet by installing Canon PRINT Inkjet/SELPHY. Download it from App Store and Google Play.

- For iOS device
- For Android device

Changing Wireless Direct Setting

Change the settings for the Wireless Direct following the procedure below.

Note

- To change the Wireless Direct settings, you need to enable Wireless Direct in advance.

1. Make sure the printer is turned on.
2. Select **Settings** on HOME screen and press **OK** button.
3. Select **LAN settings** and press the **OK** button.
4. Select **Wireless Direct** and press the **OK** button.

   Note

   - To change the Wireless Direct settings, it is necessary to be enabled for Wireless Direct before.

     Select **Advanced mode** on the menu screen displayed when selecting **Wireless Direct** and enable Wireless Direct.

5. Select a setting item.

   Press the ▲▼ button to scroll down if necessary.

   - **Show setting info**

     The setting values for using the printer with Wireless Direct are displayed.

   - **Change network name (SSID)**

     Change the identifier (SSID) for Wireless Direct.

     The identifier (SSID) is the printer's name (device name) displayed on a Wi-Fi Direct compatible device.

     Follow the procedure below to change the identifier (SSID).

     - To set manually

       1. Select **Change manually** and press **OK** button.
       2. Select Next and press **OK** button.
       3. Change using the keyboard that appears.
       4. When you have finished making changes, select OK and press **OK** button.

- To set automatically
  1. Select **Auto update** and press **OK** button.
  2. Select **Yes** and press **OK** button.

     You can check the updated setting.

  Note

  - When displaying the setting information, a screen appears asking whether to display the password at the same time. To display the password, select **ON**. To not display the password, select **OFF**.

- **Change password**

  Change the password for Wireless Direct.

  - To set manually.
    1. Select **Change manually** and press **OK** button.
    2. Select Next and press **OK** button.
    3. Enter the new password (10 characters).

       Change using the keyboard that appears.
    4. When you have finished making changes, select OK and press **OK** button.
  - To set automatically
    1. Select **Auto update** and press **OK** button.
    2. Select **Yes** and press **OK** button.

       You can check the updated setting.

    Note

    - When displaying the setting information, a screen appears asking whether to display the password at the same time. To display the password, select **ON**. To not display the password, select **OFF**.

- **Confirm connection request**

  Change the confirmation screen setting when a Wi-Fi Direct compatible device is connecting to the printer.

  If you want the printer to display the screen to inform you a Wi-Fi Direct compatible device is connecting to the printer, select **ON**.

  Important

  - To prevent an unauthorized access, we recommend you should select the setting to display the confirmation screen.

Note

- If you change the Wireless Direct setting of the printer, also change the wireless router setting of the device.

Problems While Printing (Scanning) from Smartphone/Tablet

- Cannot Print (Scan) from Smartphone/Tablet

Cannot Print (Scan) from Smartphone/Tablet

If you cannot Print (Scan) from your smartphone/tablet, it is possible that your smartphone/tablet cannot communicate with the printer.

Check the cause of your problem according to the connection method.

- Cannot Communicate with Printer via Wi-Fi
- Cannot Communicate with Printer while It Is in Wireless Direct

Note

- For problems on printing with other connection methods or more on performing settings of each connection method:

  - Using PIXMA/MAXIFY Cloud Link
  - Printing from iOS Device (AirPrint)

Q Cannot Communicate with Printer via Wi-Fi

A

If your smartphone/tablet cannot communicate with the printer, check the following.

Check1 Check power status of printer, network devices (e.g. wireless router), and your smartphone/tablet.

- Turn on the printer or your device.
- If the power is already turned on, cycle the power switch.
- It may be necessary to resolve wireless router problems (e.g. update interval of a key, problems of DHCP update interval, energy saving mode) or to update the wireless router firmware.

For details, contact the manufacturer of your wireless router.

Check2 Check settings of your smartphone/tablet.

Make sure Wi-Fi is enabled on your device.

For details, refer to your device's instruction manual.

Check3 Is printer connected to wireless router?

- Use the icon on the top of HOME screen to check the connection status between the printer and wireless router.

  If the icon is not displayed, Wi-Fi is disabled. Turn on wireless communication on the printer.
- Make sure the network settings of the printer (e.g. network name (SSID) or network key (password), etc.) are identical with those of the wireless router.

  To check the settings of the wireless router, refer to the instruction manual provided with it or contact its manufacturer.

To check the current network settings of the printer, display it using the operation panel of the printer or print it out.

- Display on the LCD.

  ➡ LAN settings

- Print the network settings.

  ➡ Printing Network Settings

Note

- If you have a computer, Wi-Fi Connection Assistant allows you to diagnose and repair the network status.

  Select the link below to download Wi-Fi Connection Assistant and install it.

  ➡ Checking Printer Connection Status Using Wi-Fi Connection Assistant

  See below for starting up Wi-Fi Connection Assistant.

  — **For Windows:**

  ➡ Starting Up Wi-Fi Connection Assistant

  — **For macOS:**

  ➡ Starting Up Wi-Fi Connection Assistant

Check4 Are network settings of your smartphone/tablet identical with those of wireless router?

Make sure the network settings of the printer (e.g. network name (SSID) or network key password) are identical with those of the wireless router.

To check the settings of your smartphone/tablet, refer to the instruction manual provided with it.

If the network settings of your smartphone/tablet are not identical with those of the wireless router, change the network settings of it to match with those of the wireless router.

Check5 Check that printer is not placed too far away from wireless router.

If the distance between the printer and wireless router is too far, wireless communication becomes poor. Place the printer and wireless router close to each other.

Check6 Check that wireless signal is strong. Monitor signal status and move printer and wireless router as necessary.

Place the printer and wireless router where there are no obstacles between them. Wireless communication between different rooms or floors is generally poor. Wireless communication can be impeded by building materials containing metal or concrete. If the printer cannot communicate with the computer over a Wi-Fi due to a wall, place the printer and the computer in the same room.

In addition, if a device like a microwave oven that emits radio waves of the same frequency bandwidth as a wireless router is nearby, it may cause interference. Place the wireless router as far away from interference sources as possible.

Check the signal strength on the LCD.

➡ LCD and Operation Panel

Q Cannot Communicate with Printer while It Is in Wireless Direct

A

If your smartphone/tablet cannot communicate with the printer in the Wireless Direct, check the following.

Check1 Check power status of printer and device (e.g. smartphone/tablet).

Turn on the printer or your device.

If the power is already turned on, cycle the power switch.

Check2 Check if the icon is displayed on the top of the HOME screen of the printer.

If it is not displayed, Wireless Direct is disabled. Please turn on the Wireless Direct.

Check3 Check settings of device (e.g. smartphone/tablet).

Make sure Wi-Fi is enabled on your device.

For details, refer to your device's instruction manual.

Check4 Check that printer is selected as connection for devices (e.g. smartphone/tablet).

Select the network name (SSID) for Wireless Direct specified for the printer as the connection destination for devices.

Check the destination on your device.

For details, refer to your device's instruction manual or visit the manufacturer's website.

To check the network name (SSID) for Wireless Direct specified for the printer, display it using the operation panel of the printer or print it out.

- Display on the LCD.

  ➡ LAN settings

- Print the network settings.

  ➡ Printing Network Settings

Check5 Check that wireless direct password set for printer is entered correctly.

To check the password specified for the printer, display it using the operation panel of the printer or print it out.

- Display on the LCD.

  ➡ LAN settings

- Print the network settings.

  ➡ Printing Network Settings

Check6 Check that printer is not placed too far away from devices.

If the distance between the printer and devices is too far, wireless communication becomes poor. Place the printer and devices close to each other.

Check7 Check that 5 devices are already connected.

Wireless Direct does not allow more than 5 devices to be connected.

Note

- Depending on the specifications of the printer you are using, some of the features described (scanner/copy, etc.) may not apply.

  For details about the functions of your printer, see Specifications.

Printing Problems

- Printer Does Not Print
- Printer Does Not Pick Up or Feed the Paper/"No Paper" Error
- Printout (Copy) Results Are Unsatisfactory
- Change to Offline (Windows)

Q

Printer Does Not Print

A

Check1 Make sure printer is turned on.

If not, make sure the printer is securely plugged in and press **ON** button to turn on.

The **ON** lamp flashes while the printer is initializing. Wait until the **ON** lamp stops flashing and remains lit.

Note

- If you are printing large data such as photos or other graphics, printing may take longer to start. The **ON** lamp flashes while the computer is processing data and sending it to the printer. Wait until printing starts.

Check2 Make sure printer is properly connected to computer.

If you are using a USB cable, make sure it is securely connected to both the printer and the computer. When the USB cable is securely plugged in, check the following:

- If you are using a relay device such as a USB hub, disconnect it, connect the printer directly to the computer, and retry the printing. If printing starts normally, there is a problem with the relay device. Contact the vendor of the relay device.
- There could also be a problem with the USB cable. Replace the USB cable and retry the printing.

If you use the printer with a network connection, make sure the printer is correctly set up for network use.

➡ Cannot Find Printer on Network (Windows/macOS)

Note

- Wi-Fi Connection Assistant allows you to diagnose and repair the network status.

  Select the link below to download Wi-Fi Connection Assistant and install it.

  ➡ Checking Printer Connection Status Using Wi-Fi Connection Assistant

  See below for starting up Wi-Fi Connection Assistant.

  - **For Windows:**

    ➡ Starting Up Wi-Fi Connection Assistant

  - **For macOS:**

    ➡ Starting Up Wi-Fi Connection Assistant

Check3 Make sure paper settings match information set for rear tray.

If the paper settings do not match the information set for the rear tray, an error message appears on the LCD. Follow the instructions on the LCD to solve the problem.

Note

- You can select whether the message which prevents misprinting is displayed.
  - To change the message view setting when printing using the printer's operation panel:
    - Feed settings
  - To change the message view setting when printing using the printer driver:
    - Changing the Printer Operation Mode (Windows)
    - Changing the Printer Operation Mode (macOS)

Check4 If printing from a computer, delete unnecessary print jobs.

- **For Windows:**
  - Deleting the Undesired Print Job
- **For macOS:**
  - Deleting the Undesired Print Job

Check5 Is your printer's printer driver selected when printing?

The printer will not print properly if you are using a printer driver for a different printer.

- **For Windows:**

  Make sure "Canon XXX series" (where "XXX" is your printer's name) is selected in the Print dialog box.

  Note

  - If multiple printers are registered to your computer, set your printer as default printer to make the one selected by default.
    - Default Printer Keeps Changing (Windows)

- **For macOS:**

  Make sure your printer's name is selected in **Printer** in the Print dialog.

  Note

  - If multiple printers are registered to your computer, select **Set as Default Printer** from **System Preferences** > **Printers & Scanners** for a printer to make the one selected by default.

Check6 Are you trying to print a large data file? (Windows)

If you are trying to print a large data file, it takes a long time to start printing.

If the printer does not start printing after a certain period of time, select **On** for **Prevention of Print Data Loss** on the **Print Options** dialog box.

For details, refer to Page Setup Tab Description.

Important

- Selecting **On** for **Prevention of Print Data Loss** may reduce print quality.

- After printing is completed, select **Off** for **Prevention of Print Data Loss**.

Check7 If printing from your computer, restart the computer.

Restart the computer and try printing again.

Important

- For Windows:

  To restart your computer, choose **Restart** instead of **Shut down**.

Q

Printer Does Not Pick Up or Feed the Paper/"No Paper" Error

A

Check1 Make sure paper is loaded in the rear tray.

➡ Loading Paper

Check2 When loading paper, consider the following.

- When loading two or more sheets of paper, align the edges of the sheets before loading the paper.
- When loading two or more sheets of paper, make sure the paper stack does not exceed the paper load limit.

  However, paper may not feed correctly at the maximum capacity, depending on the type of paper or environmental conditions (very high or low temperature and humidity). In such cases, reduce the amount of paper you load at a time to less than half of the paper load limit.
- Always load the paper in portrait orientation, regardless of the printing orientation.
- When you load the paper on the rear tray, place the print side facing UP and align the right and left paper guides with the paper stack.

  ➡ Loading Paper

Check3 Is paper too thick or curled?

➡ Unsupported Media Types

Check4 When loading envelopes, consider the following.

When printing on envelopes, see Loading Envelopes in Rear Tray, and prepare the envelopes before printing.

Once you have prepared the envelopes, load them in portrait orientation. If the envelopes are placed in landscape orientation, they will not feed properly.

Check5 Make sure media type and paper size settings match with loaded paper.

Check6 Make sure that there are not any foreign objects in the rear tray.

If the paper tears in the rear tray, see What to Do When Paper Is Jammed to remove it.

If a foreign object is inside the rear tray, remove it according to the following procedure.

1. Turn off the power of the printer and disconnect the power plug from the outlet.

2. Fold one A4 sheet in half and insert it horizontally into the rear tray.

   Insert the paper so that your hand does not directly touch the part in the center of the rear tray when removing the foreign object.

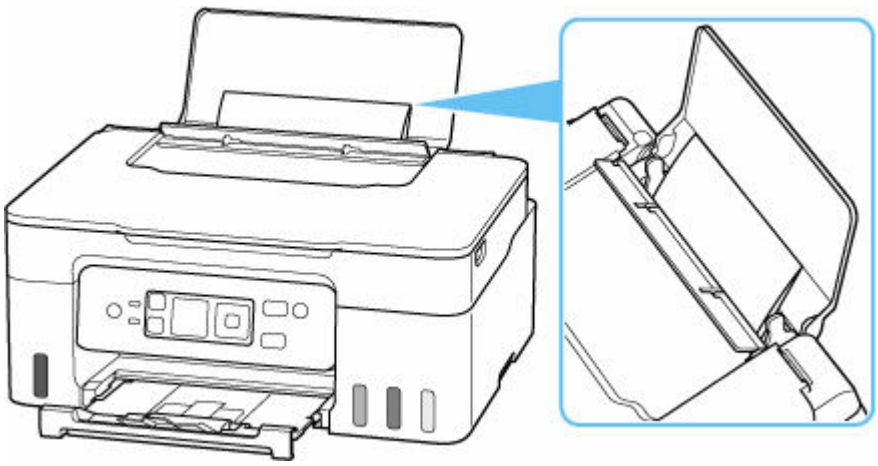

3. Remove foreign object by hand with paper inserted.

   Put your hand between the paper you inserted and the rear tray to remove the foreign object.

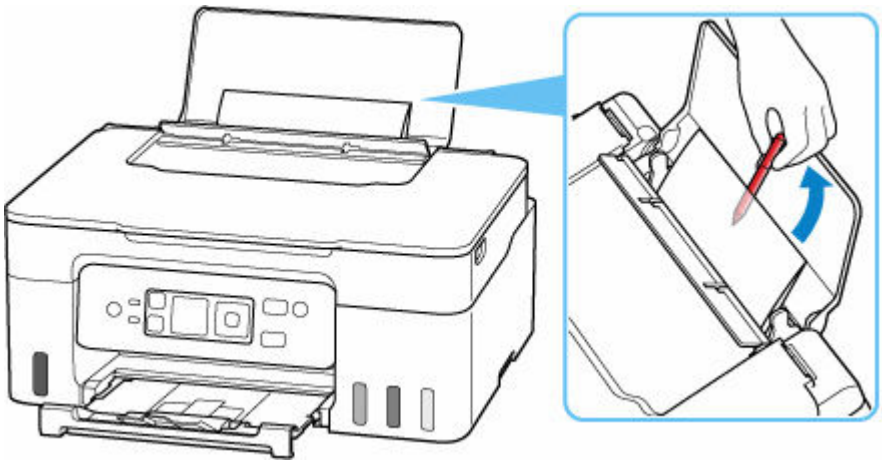

4. Remove the folded paper inserted in step 2.

Important

- Do not tilt the printer or do not it upside down. Doing so may cause the ink to leak.

Check7 Clean Paper Feed Roller.

➡ Cleaning Paper Feed Rollers

Note

- Cleaning the paper feed roller abrades it, so do this only when necessary.

If the measures above do not solve the problem, contact your nearest Canon service center to request a repair.

Important

- Do not tilt the printer when moving it since the ink may leak out.
- When transporting the printer for repairing it, see Repairing Your Printer.

Printout (Copy) Results Are Unsatisfactory

If the print results are unsatisfactory due to white streaks, misaligned/distorted lines, or uneven colors, check the paper and print quality settings first.

Check1 Do page size and media type settings match size and type of loaded paper?

If these settings do not match, it is not possible to obtain the proper result.

If you are printing a photograph or an illustration, an incorrect paper type setting may reduce the quality of the printout color.

Also, if you print with an incorrect paper type setting, the printed surface may be scratched.

In borderless printing, uneven coloring may occur depending on the combination of the paper type setting and the loaded paper.

The method for checking the paper and print quality settings differs depending on what you are using your printer for.

- **Printing from printer**

  Check the settings using the LCD.

  ➡ Setting Items for Copying

- **Printing from your computer**

  Check the settings using the printer driver.

  ➡ Basic Printing Setup

- **Printing from a PictBridge (Wi-Fi) compliant device**

  Check the settings on your PictBridge (Wi-Fi) compliant device or the operation panel.

  ➡ PictBridge (Wi-Fi) Print Settings
  ➡ PictBridge settings

- **Printing from your smartphone/tablet using Canon PRINT Inkjet/SELPHY**

  Check the settings on Canon PRINT Inkjet/SELPHY.

  ➡ Print Photos from Your Smartphone

Check2 Make sure appropriate print quality is selected (see list above).

Select a print quality suited to the paper and to what you are printing. If you notice blurs or uneven colors, increase the print quality setting and retry the printing.

Note

- When printing from a PictBridge (Wi-Fi) compliant device, set the print quality setting using the operation panel.

  This setting cannot be made on the PictBridge (Wi-Fi) compliant device.

Check3 If problem is not resolved, click on illustration that corresponds to problem.

Ink Does Not Come Out

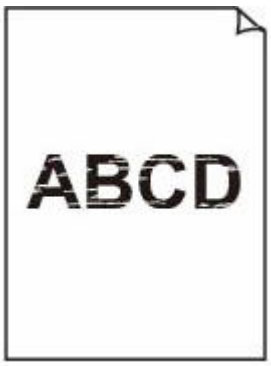

Blurry or Fuzzy

Inaccurate or Bleeding Colors

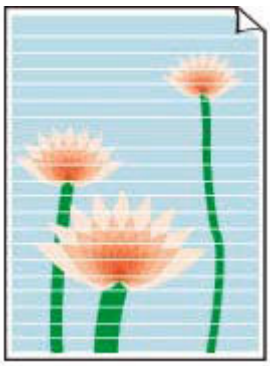

Streaks

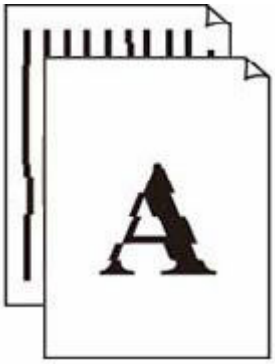

Lines Are Misaligned/Distorted

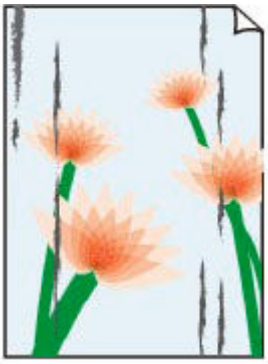

Paper Is Smudged/ Printed Surface Is Scratched

Ink Blots/Paper Curl

Vertical Line Next to Image

Images Incomplete/ Cannot Complete Printing

	Tokyo	London
Jan.	12,000	10,500
Feb.	11,500	10,800
Mar.	13,800	12,800
Apr.	12,000	10,500
May.	11,500	10,800
June	13,800	12,800

Lines Incomplete or Missing (Windows)

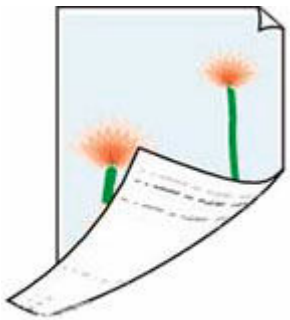

Back of Paper Is Smudged

Uneven Colors

Streaked Colors

Note

- Depending on the specifications of the printer you are using, some of the features described (scanner/ copy, etc.) may not apply.

  For details about the functions of your printer, see Specifications.

Q

Ink Does Not Come Out/Blurry or Fuzzy/Inaccurate or Bleeding Colors/Streaks

Ink Does Not Come Out

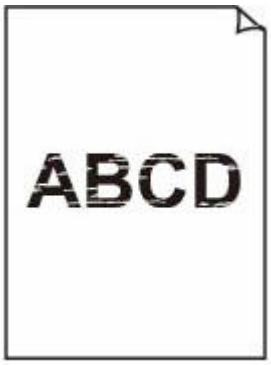

Blurry or Fuzzy

Inaccurate or Bleeding Colors

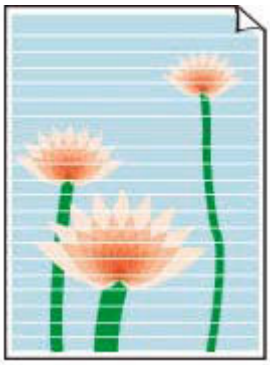

Streaks

A

Note

- If printouts are blank, black does not print, is faint, or has a blue or red tint, refer to this web page.

Check1 Check paper and print quality settings.

➡ Printout (Copy) Results Are Unsatisfactory

Check2 Are the print head nozzles clogged?

Print the nozzle check pattern to determine whether the ink ejects properly from the print head nozzles.

Step1 Print the nozzle check pattern.

After printing the nozzle check pattern, examine the pattern.

- From the printer
  - ➡ Printing the Nozzle Check Pattern
- From the computer
  - **For Windows:**
    - ➡ Printing a Nozzle Check Pattern
  - **For macOS:**
    - ➡ Printing a Nozzle Check Pattern

If the pattern is not printed correctly, go to the next step.

Step2 Clean the print head.

After cleaning the print head, print the nozzle check pattern and check the result.

- From the printer

➡ Cleaning the Print Head

- From the computer
  - **For Windows:**
    ➡ Clean the print head
  - **For macOS:**
    ➡ Clean the print head

If it still does not improve, go to the next step.

Step3 Clean the print head again.

After cleaning the print head again, print the nozzle check pattern and check the result.

If it still does not improve, go to the next step.

Step4 Clean the print head deeply.

After cleaning the print head deeply, print the nozzle check pattern and check the result.

- From the printer
  ➡ Deep Print Head Cleaning
- From the computer
  - **For Windows:**
    ➡ Clean the print head deeply
  - **For macOS:**
    ➡ Clean the print head deeply

If it does not improve, turn off the printer, wait for more than 24 hours without unplugging the power supply, and go to the next step.

Step5 Clean the print head deeply again.

After cleaning the print head deeply again, print the nozzle check pattern and check the result.

For details on printing the nozzle check pattern, print head cleaning, and print head deep cleaning, see If Printing Is Faint or Uneven.

Check3 When using paper with one printable surface, check the correct printable side of the paper.

Printing on the wrong side of such paper may cause unclear prints or prints with reduced quality.

When you load paper on the rear tray, load paper with the printable side facing up.

Refer to the instruction manual supplied with the paper for detailed information on the printable side.

- **When copying, see also the sections below:**

Check4 Is platen glass dirty?

Clean the platen glass.

➡ Cleaning Platen and Document Cover

Check5 Make sure original is properly loaded on platen.

When you load the original on the platen, load it with the side to be copied facing down.

➡ Loading Originals

Check6 Is copy source a printed paper by printer?

If you use a printout done by this printer as the original, print quality may be reduced depending on the condition of the original.

Print from the printer directly, or reprint from the computer if you can reprint from it.

Check7 If the ink still does not come out.

➡ Replace Ink in Print Head

Note

- Although some air may enter the ink tube, it is not a malfunction. No problem if the nozzle check pattern is printed correctly.

Q

Lines Are Misaligned/Distorted

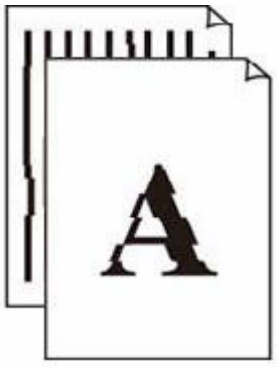

A

Note

- For the case of misaligned or distortion, refer to this web page.

Check1 Check paper and print quality settings.

➡ Printout (Copy) Results Are Unsatisfactory

Check2 Perform print head alignment.

If printed lines are misaligned/distorted or print results are otherwise unsatisfactory, adjust the print head position.

➡ Aligning the Print Head

Check3 Increase print quality and try printing again.

Increasing the print quality using operation panel or from computer may improve the print result.

Q

Paper Is Smudged/Printed Surface Is Scratched/Ink Blots/Paper Curl

A

Check1 Check paper and print quality settings.

➡ Printout (Copy) Results Are Unsatisfactory

Check2 Check paper type.

Make sure you are using the right paper for what you are printing. To print data with high color saturation such as photographs or images with dark colors, we recommend that you use Photo Paper Plus Glossy II or other Canon specialty paper.

➡ Supported Media Types

Check3 Correct curl before loading paper.

When using Photo Paper Plus Semi-gloss, even if the sheet is curled, load one sheet at a time as it is. Rolling this paper in the opposite direction to flatten it may crack the paper surface and reduce the print quality.

We recommend putting unused paper back into the package and storing it flat.

- **Plain Paper**

  Turn the paper over and reload it to print on the other side.

- **Other Paper such as envelope**

  If the paper corners curl more than 0.1 in. / 3 mm (A) in height, the paper may smudge or may not feed properly. Follow the instructions below to correct the paper curl.

1. Roll up paper in opposite direction to paper curl as shown below.

2. Check that paper is now flat.

   We recommend printing curl-corrected paper one sheet at a time.

Note

- Depending on paper type, the paper may smudge or may not feed properly even if it is not curled inward. Follow the instructions below to curl the paper outward up to 0.1 in. / 3 mm (C) in height before printing. This may improve the print result.

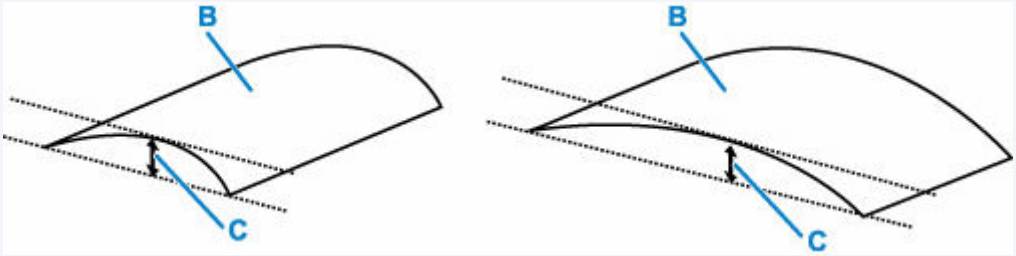

(B) Print side

We recommend feeding paper that has been curled outward one sheet at a time.

Check4 Set printer to prevent paper abrasion.

Adjusting the setting to prevent paper abrasion will widen the clearance between the print head and the paper. If you notice abrasion even with the media type set correctly to match the paper, set the printer to prevent paper abrasion using the operation panel or the computer.

This may reduce the print speed.

* Once you have finished printing, undo this setting. Otherwise, it will apply to subsequent print jobs.

Select **Settings** on HOME screen > **Device settings** > **Print settings** and set **Prevent paper abrasion** to **ON** .

➡ Changing Settings from Operation Panel

Check5 If brightness is set low, increase brightness setting and try printing again.

If you are printing with a low brightness setting on plain paper, the paper may absorb too much ink and become wavy, causing paper abrasion.

- Printing from your computer (Windows)

  Check the brightness setting in the printer driver.

- Changing settings of print option

- Copying

  - Setting Items for Copying

Check6 Is platen glass dirty?

Clean the platen glass.

- Cleaning Platen and Document Cover

Check7 Is paper feed roller dirty?

Clean paper feed roller.

- Cleaning Paper Feed Rollers

Note

- Cleaning the paper feed roller abrades it, so do this only when necessary.

Check8 Is inside of printer dirty?

During duplex printing, ink may stain the inside of the printer, smudging the printout.

Perform bottom plate cleaning to clean inside of printer.

- Cleaning Inside the Printer (Bottom Plate Cleaning)

Note

- To prevent staining inside the printer, be sure to set the correct paper size.

Check9 Set longer ink drying time.

This allows the printed surface to dry, preventing smudges and scratches.

- **For Windows:**

  Set the waiting time using Canon IJ Printer Assistant Tool.

  - Changing the Printer Operation Mode

- **For macOS:**

  Set the waiting time using Remote UI.

  - Opening Remote UI for Maintenance

Q

Vertical Line Next to Image

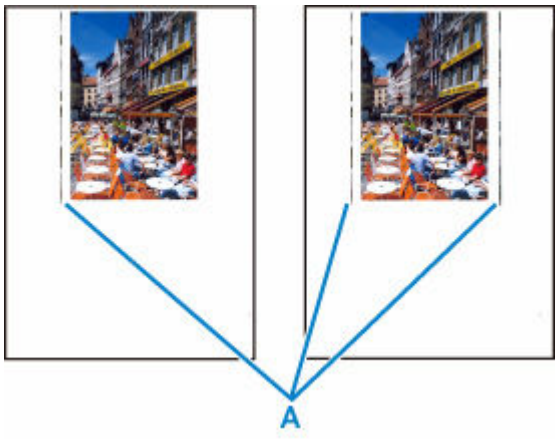

A

Check Is loaded paper size correct?

If the loaded paper is larger than the size you specified, vertical lines (A) may appear in the left margin or the both margins.

Set the paper size to match the loaded paper.

➡Printout (Copy) Results Are Unsatisfactory

Note

- The direction or pattern of the vertical lines (A) may vary depending on the image data or the print setting.
- This printer performs automatic cleaning when necessary to keep printouts clean. A small amount of ink is ejected for cleaning.

  Although the ink is normally ejected onto the ink absorber at the outer edge of the paper, it may get onto the paper if the loaded paper is larger than the set size.

Q

Images Incomplete/Cannot Complete Printing

A

If the printing of photos, images, stops in the middle of printing and cannot be printed to the end, check the following items.

Check1 Select setting not to compress printing data. (Windows)

If you select the setting not to compress the printing data with an application software you are using, the printing result may be improved.

Click **Print Options** on **Page Setup** sheet of the printer driver. Select the **Do not allow application software to compress print data** check box and click **OK**.

Important

- Clear the check box once printing is complete.

Check2 Are you trying to print a large data file? (Windows)

If you are trying to print a large data file, printing may not be performed properly due to missing print data.

Select **On** for **Prevention of Print Data Loss** on the **Print Options** dialog box of the printer driver.

For details, refer to Page Setup Tab Description.

Important

- Selecting **On** for **Prevention of Print Data Loss** may reduce print quality.
- After printing is completed, select **Off** for **Prevention of Print Data Loss**.

Check3 Your hard disk may not have sufficient free space to store job.

Delete unnecessary files to free up disk space.

Lines Incomplete or Missing (Windows)

	Tokyo	London
Jan.	12,000	10,500
Feb.	11,500	10,800
Mar.	13,800	12,800
Apr.	12,000	10,500
May.	11,500	10,800
June	13,800	12,800

Check1 Are you using Page Layout Printing or Binding Margin function?

When the Page Layout Printing or Binding margin function is in use, thin lines may not be printed. Try thickening the lines in the document.

Check2 Are you trying to print a large data file? (Windows)

If you are trying to print a large data file, printing may not be performed properly due to missing print data.

Select **On** for **Prevention of Print Data Loss** on the **Print Options** dialog box of the printer driver.

For details, refer to Page Setup Tab Description.

Important

- Selecting **On** for **Prevention of Print Data Loss** may reduce print quality.
- After printing is completed, select **Off** for **Prevention of Print Data Loss**.

Back of Paper Is Smudged

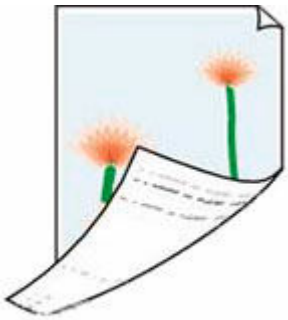

Check1 Check paper and print quality settings.

➡ Printout (Copy) Results Are Unsatisfactory

Check2 Perform bottom plate cleaning to clean inside of printer.

➡ Cleaning Inside the Printer (Bottom Plate Cleaning)

Note

- During borderless printing, duplex printing, or too much printing, ink may stain the inside of the printer.

Uneven or Streaked Colors

Check1 Increase print quality and try printing again.

Increasing the print quality using the operation panel or the printer driver may improve the print result.

Check2 Perform print head alignment.

➡ Aligning the Print Head

Change to Offline (Windows)

If the printer cannot communicate with the computer, an error message "Offline" may be displayed when printing. To bring the printer back online, try the following.

1. Check the connection (USB/Wi-Fi).

   For USB connection:

   Make sure that the USB-connected printer is recognized by the computer.

   For Wi-Fi connections:

   Make sure that icon appears on the printer's LCD.

2. Turn off printer and then turn it on again.

   Confirm that the offline mode has been disabled. If the printer is still offline, proceed to the next step.

3. Check the name of the printer driver.

   Check the names of the printer and printer driver match and set the using printer as default.

   ➡ Default Printer Keeps Changing (Windows)

   Confirm that the offline mode has been disabled. If the printer is still offline, proceed to the next step.

4. Make sure that printer is not set to **Use Printer Offline** mode.

   For Windows 11:

   Select **Start** > **Settings** > **Bluetooth & devices** > **Printers & scanners**. Select your printer and select **Open print queue**. Under **Printer**, make sure that **Use Printer Offline** is not selected.

   Note

   - **For Windows 10:**

     Select **Start** > **Settings** > **Devices** > **Printers & scanners**. Select your printer and select **Open queue**. Under **Printer**, make sure that **Use Printer Offline** is not selected.

   - **For Windows 8/Windows 8.1:**

     From the **Control Panel**, select **View devices and printers** or **Devices and Printers**. Select your printer from **Printers**, then select **See what's printing** from the toolbar. Under **Printer**, make sure that **Use Printer Offline** is not selected.

Confirm that the offline mode has been disabled. If the printer is still offline, proceed to the next step.

5. For Wi-Fi connections, use Wi-Fi Connection Assistant to change settings.

   Diagnose and repair the network connections using Wi-Fi Connection Assistant.

   Download Wi-Fi Connection Assistant from the below page, and install it on your computer.

   ➡ Checking Printer Connection Status Using Wi-Fi Connection Assistant

   Refer to below in regard to starting up Wi-Fi Connection Assistant.

   ➡ Starting Up Wi-Fi Connection Assistant

   Confirm that the offline mode has been disabled. If the printer is still offline, proceed to the next step.

6. Uninstall printer driver and reinstall printer driver.

   If your printer driver version is old or not installed correctly, you may not be able to print.

   Confirm that the offline mode has been disabled. If the printer is still offline, proceed to the next step.

7. Restart computer.

   The computer may be unstable for some reason. Restart the computer and try to print.

   Important

   - When restarting the computer, choose **Restart** instead of **Shut down**.

Scanning Problems (Windows)

➤ Scanning Problems

Scanning Problems

- Scanner Does Not Work
- ScanGear (Scanner Driver) Does Not Start

Scanner Does Not Work

Check 1 Make sure that your scanner or printer is turned on.

Check 2 Check for any printererrors.

For messages, see When Error Occurred.

Check 3 Connect the USB cable to a different USB port on the computer.

Check 4 If the USB cable is connected to a USB hub, remove it from the USB hub and connect it to a USB port on the computer.

Check 5 With network connection, check the connection status and reconnect as needed.

➡ Network Scan Settings

Check 6 Restart the computer.

Check 7 Reinstall MP Drivers from the Setup CD-ROM or our website.

ScanGear (Scanner Driver) Does Not Start

Check 1 Make sure MP Drivers is installed.

If not installed, install MP Drivers from the Setup CD-ROM or our website.

Check 2 Select your scanner or printer on the application's menu.

Important

- If your scanner or printer name is displayed multiple times, select the one that does not include WIA.

Note

- The operation may differ depending on the application.
- Use the WIA driver when scanning from a WIA-compliant application.

  ➡ Scanning with WIA Driver

Check 3 Make sure that the application supports TWAIN.

You cannot start ScanGear (scanner driver) from applications not supporting TWAIN.

Check 4 Scan and save images with IJ Scan Utility and open the files in your application.

Scanning Problems (macOS)

➤ Scanning Problems

Scanning Problems

- Scanner Does Not Work
- Scanner Driver Does Not Start

Scanner Does Not Work

Check 1 Check that your scanner or printer is turned on.

Check 2 Check for any printer errors.

For messages, see When Error Occurred.

Check 3 With network connection, check the connection status and reconnect as needed.

Check 4 With USB connection, connect the USB cable to a different USB port on the computer.

Check 5 If the USB cable is connected to a USB hub, remove it from the USB hub and connect it to a USB port on the computer.

Check 6 Restart the computer.

Check 7 To scan from the printer's operation panel with USB connection, click **Scan-from-Operation-Panel Settings** in the **Settings (General Settings)** dialog, and then check that the following checkboxes are selected.

- Your scanner or printer
- **Enables scanning from the operation panel**

Scanner Driver Does Not Start

Check 1 Make sure the application software supports AirPrint.

Check 2 Select your scanner or printer on the application's menu.

Note

- The operation may differ depending on the application.

Check 3 Scan and save images with IJ Scan Utility Lite and open the files in your application.

Check 4 Your scanner may be locked. (Personal scanners only)

If IJ Scan Utility Lite or the application is running, exit it. Slide the scanner lock switch to the release position ( ), then reconnect the USB cable.

Mechanical Problems

- Printer Does Not Turn On
- Printer Turns Off Unexpectedly or Repeatedly
- USB Connection Problems
- Switching Printer's Connection to Network or Devices
- Wrong Language Appears in LCD

Printer Does Not Turn On

Check1 Press **ON** button.

➡ Power Supply

Check2 Make sure power plug is securely connected to printer, and then turn on again.

Check3 Unplug printer, leave it for at least 2 minutes, and then plug it back in and turn on again.

If this does not solve the problem, contact your nearest Canon service center to request a repair.

Printer Turns Off Unexpectedly or Repeatedly

Check If printer is set to turn off automatically after a certain time, disable this setting.

If you have set the printer to turn off automatically after a specified time, the power will shut off by itself once that time has elapsed.

1. Check that printer is turned on.
2. Select **Settings** on HOME screen and press **OK** button.
3. Select **ECO settings** and press **OK** button.
4. Select auto power off item and press **OK** button.
5. Select **OFF** and press the **OK** button.
6. Press HOME screen button.

   The setting to shut off the power automatically is disabled and return to HOME screen.

Note

- If this setting is changed, power consumption may increase.

USB Connection Problems

If the printer connected to the computer via USB is not recognized, check the following items.

➡ USB Connection Not Recognized

The following problems may occur even though the USB connection is recognized.

- Printing (scanning) is slow.
- Hi-Speed USB connection does not work.
- A message such as "**This device can perform faster**" appears. (Windows)

If the above is the case, check the following.

➡ USB Connection Does Not Work Properly

Note

- If your system environment does not support Hi-Speed USB, the printer operates at the slower speed of Full-Speed or Low-Speed. In this case, the printer works properly but printing (scanning) speed may slow down due to the communication speed.

USB Connection Not Recognized

Check1 Check that printer is turned on.

Check2 Unplug the USB cable from the printer and the computer, and then connect it again.

As the illustration below, the USB port is at the back of the printer.

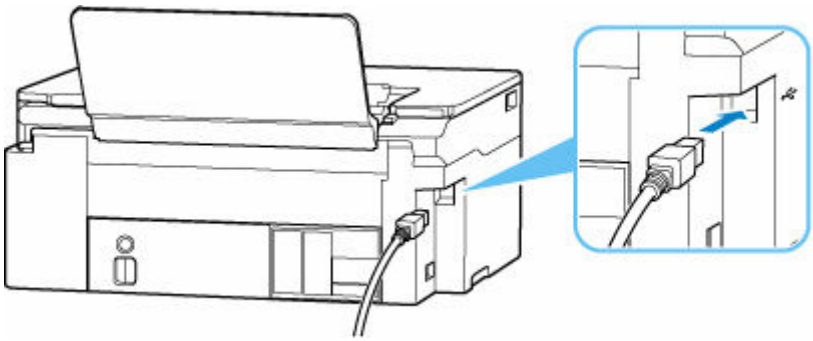

Important

- Check the orientation of the "Type-B" connector and connect to the printer. For details, refer to the instruction manual supplied with the USB cable.

Check3 Check that **Enable bidirectional support** is selected in **Ports** sheet of **Printer properties** dialog box. (Windows)

If not, select it to enable bidirectional support.

➡ Opening Printer Driver's Setup Screen

USB Connection Does Not Work Properly

Check Check following to make sure your system environment supports Hi-Speed USB connection.

- The types of USB cables that can be used differ depending on your printer. Check the shape of the USB cable connection of the printer.

  ➡ What Is USB Cable?

- Does the USB port on your computer support Hi-Speed USB connection?
- Does the USB cable or the USB hub support Hi-Speed USB connection?

  Be sure to use a certified Hi-Speed USB cable. We recommend that the USB cable be no longer than 10 feet / 3 meters or so.

- Is the Hi-Speed USB driver working properly on your computer?

  Make sure the latest Hi-Speed USB driver is working properly and install the latest version of the Hi-Speed USB driver for your computer, if necessary.

Important

- For more information, contact the manufacturer of your computer, USB cable, or USB hub.

Wrong Language Appears in LCD

Follow the instructions below to select your language.

1. Press HOME button twice.
2. Press ▼ button 3 times on HOME screen and press **OK** button.

   ➡ LCD and Operation Panel
3. Press ▼ button 1 time and press **OK** button.
4. Press ▼ button 5 times and press **OK** button.
5. Select a language using ▲▼ button and press **OK** button.
6. Press **OK** button.

Installation and Download Problems

- Failed to MP Drivers (Printer Driver) Installation (Windows)
- Cannot Proceed Beyond Printer Connection Screen (Cannot Find Printer Connected via USB)
- Updating MP Drivers (Printer Driver) in Network Environment (Windows)
- Disable Function to Send Usage Information of Printer

Failed to MP Drivers (Printer Driver) Installation (Windows)

If the MP Drivers (Printer Driver) were not installed correctly, make sure that all **Windows Updates** have been applied. If all **Windows Updates** have not been applied, apply all **Windows Updates**.

After confirming **Windows Update**, perform the following operations to install the MP Drivers (Printer Driver).

1. Open screen to uninstall MP Drivers (Printer Driver).

   For Windows 11:

   Select **Settings** > **Apps**.

   Select **Apps & features**.

   For Windows 10:

   Select **Settings** > **Apps**.

   For Windows 8.1 / Windows 7:

   Select **Control Panel** > **Programs and Features**.

2. Check if there is "**Canon XXX series Driver**" or "**Canon XXX series Printer Driver**" you want to install in list.

   "XXX" is the model name.

3. If you find MP Drivers (Printer Driver) for printer you want to install, uninstall it.

   If not found, proceed to the next step.

4. Restart computer.

   After restarting, install the latest MP Drivers (Printer Driver).

   Important

   - For Windows:

     To restart your computer, choose **Restart** instead of **Shut down**.

Cannot Proceed Beyond Printer Connection Screen (Cannot Find Printer Connected via USB)

If you cannot proceed beyond the **Printer Connection** screen, check the following.

Check1 Make sure USB cable is securely plugged in to printer and computer.

Connect the printer and the computer using a USB cable as the illustration below. The USB port is located at the back of the printer.

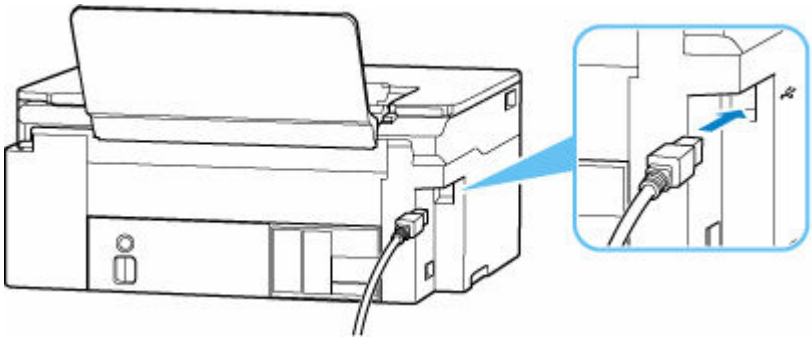

Important

- Check the orientation of the "Type-B" connector and connect to the printer. For details, refer to the instruction manual supplied with the USB cable.

Check2 Follow procedure below to connect printer and computer again.

Important

- For macOS, make sure the lock icon is on the lower left of the **Printers & Scanners** screen.

  If the icon (locked) is displayed, click the icon to unlock. (The administrator name and the password are necessary to unlock.)

1. Unplug USB cable from printer and computer and connect it again.
2. Make sure no printer operation is in progress and turn off.
3. Turn on printer.

Check3 Follow the steps below to install MP Drivers (Printer Driver) again.

1. Download the latest MP Drivers (Printer Driver).

2. Turn off printer.

3. Restart computer.

   After restarting, install the latest MP Drivers (Printer Driver) downloaded in step 1.

Important

- When installing the MP Drivers (Printer Driver), make sure you select the correct printer name.
- For Windows:

  To restart your computer, choose **Restart** instead of **Shut down**.

Updating MP Drivers (Printer Driver) in Network Environment (Windows)

Download the latest MP Drivers (Printer Driver) in advance.

Download the latest MP Drivers (Printer Driver) for your model on the download page of the Canon website.

After the download is completed, overwrite and install the new version of the MP Drivers (Printer Driver) according to the specified installation procedure.

Note

- The network settings on the printer are not affected, so the printer can be used on the network without redoing settings.

Errors and Messages

- When Error Occurred
- Message Is Displayed
- Error Message Is Displayed on PictBridge (Wi-Fi) Compliant Device

When Error Occurred

If an error occurs while printing, for example, if the paper runs out or jams, a troubleshooting message is displayed automatically. For some errors, a support code (error number) is also displayed.

Take the appropriate action described in the message.

When a Support Code and a Message are displayed on the Computer Screen (Windows):

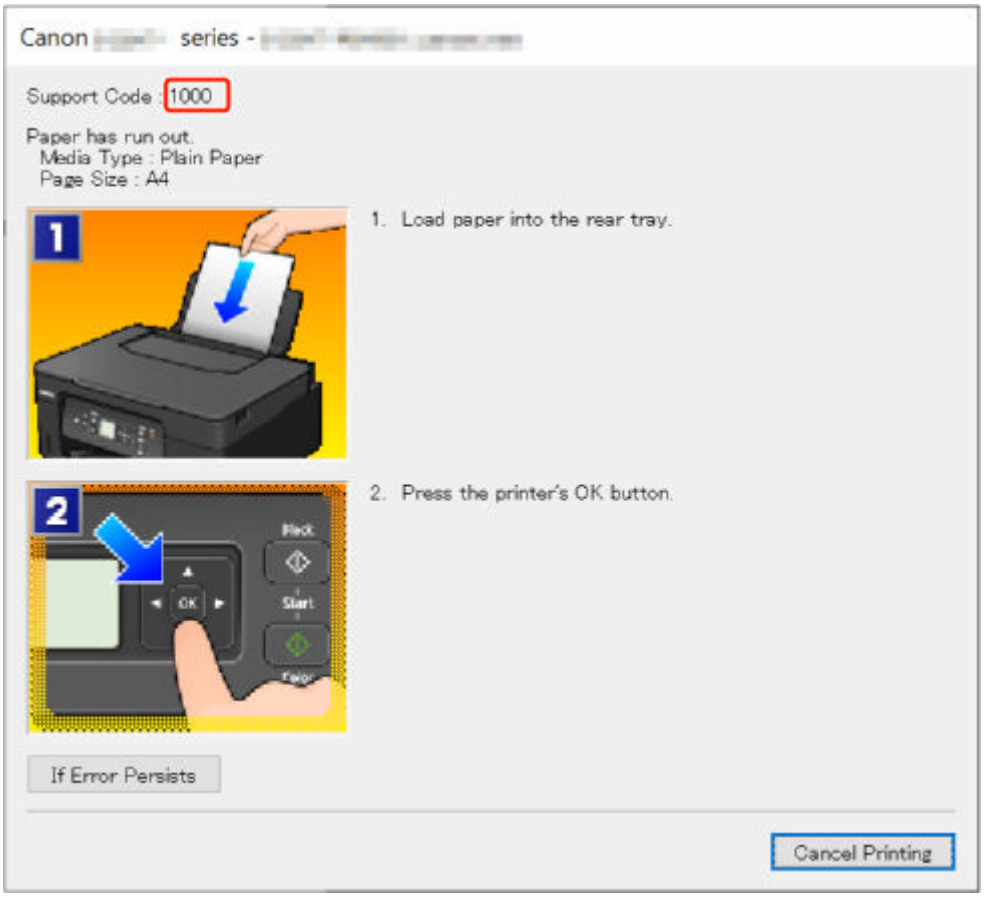

When a Support Code and a Message are displayed on the Printer's LCD:

For details on how to resolve errors with Support Codes, see List of Support Codes for Printer Errors.

For details on how to resolve errors without Support Codes, see Message Is Displayed.

Message Is Displayed

This section describes some of the messages.

If a message is displayed on the printer's LCD, see below.

➡ Message Is Displayed on Printer's LCD

If a message is displayed on the computer, see below.

➡ Error Regarding Power Cord Being Unplugged Is Displayed (Windows)
➡ Writing Error/Output Error/Communication Error (Windows)
➡ Other Error Messages (Windows)

Message Is Displayed on Printer's LCD

Check the message and take appropriate action.

- **Power was not turned off correctly the last time. Press ⏻ when turning power off.**

  The printer may have been unplugged while the power was still on.

  Press the printer's **OK** button to cancel the error.

  See Unplugging the Printer to unplug the printer correctly.

- **Cannot connect to the server. Please wait a while and try again.**

  The printer cannot connect to the server due to a communication error.

  Press the printer's **OK** button to cancel the error and try again after a while.

Error Regarding Power Cord Being Unplugged Is Displayed (Windows)

The printer may have been unplugged while it was on.

Check the error message displayed on the computer and click **OK**.

The printer starts printing.

See Unplugging the Printer to unplug the printer correctly.

Writing Error/Output Error/Communication Error (Windows)

Check 1 If the **ON** lamp is off, make sure printer is plugged in and turn on.

The **ON** lamp flashes while the printer is initializing. Wait until the **ON** lamp stops flashing and remains lit.

Check 2 Make sure printer is properly connected to computer.

If you are using a USB cable, make sure it is securely connected to both the printer and the computer. When the USB cable is securely plugged in, check the following:

- If you are using a relay device such as a USB hub, disconnect it, connect the printer directly to the computer, and retry the printing. If printing starts normally, there is a problem with the relay device. Contact the vendor of the relay device.

- There could also be a problem with the USB cable. Replace the USB cable and retry the printing.

If you use the printer over a LAN, make sure the printer is correctly set up for network use.

Check 3 Make sure MP Drivers are installed correctly.

Refer to Updating the Driver to uninstall unnecessary drivers and install the latest drivers.

Check 4 When printer is connected to your computer with a USB cable, check device status from your computer.

Follow the procedure below to check the device status.

1. Select **Control Panel** > **Hardware and Sound** > **Device Manager**.

   Note

   - If the **User Account Control** screen is displayed, select **Yes**.

2. Open **USB Printing Support Properties**.

   Double-click **Universal Serial Bus controllers** and **USB Printing Support**.

   Note

   - If the **USB Printing Support Properties** screen is not displayed, make sure the printer is correctly connected to the computer.

     ➡ Check 2 Make sure printer is properly connected to computer.

3. Click **General** tab and check for a device problem.

   If a device error is shown, see Windows Help to resolve it.

Other Error Messages (Windows)

Check If an error message is displayed somewhere other than printer status monitor, check the following:

- **"Could not spool successfully due to insufficient disk space"**

  Delete any unnecessary files to increase the amount of free space on the disk.

- **"Could not spool successfully due to insufficient memory"**

  Close other applications to increase the available memory.

  If you still cannot print, restart your computer and retry the printing.

- **"Printer driver could not be found"**

  Refer to Updating the Driver to uninstall unnecessary drivers and install the latest drivers.

- **"Could not print Application name** - File name"

  Try printing again once the current job is complete.

List of Support Codes for Printer Errors

Support codes are displayed on the printer's LCD and your computer screen when errors occur.

A "support code" is an error number, and is displayed along with an error message.

When an error occurs, check the support code and take the appropriate action in response.

Support Codes Displayed on Printer's LCD and Computer Screen

- **1000 to 1ZZZ**

  1000 1070 1071 1072 1073 1200 1215 1300 1368 1372 1431 1432
  1470 1471 1472 1473 1476 1496 15A0 15A1 1640 1717 1718 1719
  171A 1723 1724 1725 1726 1727

- **2000 to 2ZZZ**

  2114 2123 2200 2700 2900 2901

- **3000 to 3ZZZ**

  3252 3405 3407 3412 3413 3438 3440 3441 3442 3443 3444 3445
  3446 3447 3449 3454 3455

- **4000 to 4ZZZ**

  4103 4104 410D 495A

- **5000 to 5ZZZ**

  5011 5012 5050 5100 5107 5200 5205 5206 5400 5C02 5C30

- **6000 to 6ZZZ**

  6000 6006 6500 6503 6800 6801 6830 6831 6832 6833 6900 6901
  6902 6910 6930 6931 6932 6933 6936 6937 6938 6940 6941 6942
  6943 6944 6945 6946 6D01

- **7000 to 7ZZZ**

  7500 7600 7700 7800

- **A000 to ZZZZ**

  B20B　C100　C101

Note

- If no support code is displayed but the paper is not fed or output normally, see What to Do If Paper Is Not Fed/Output Normally.

What to Do When Paper Is Jammed

If a paper jam occurs during printing (when the support code 1300 is displayed), follow the procedure below.

Note

- If the paper is not jammed (no support code displayed) but the paper is not fed or output normally, see What to Do If Paper Is Not Fed/Output Normally.

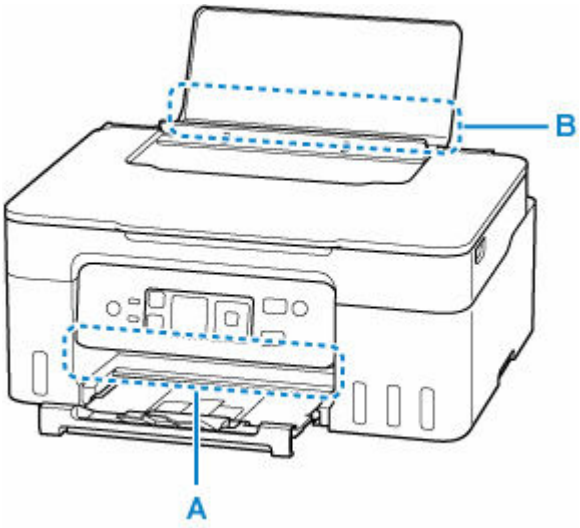

Important

- When checking the paper output slot / feed slot or removing any foreign objects, do not turn the printer upside down or tilt it. The ink may leak out.

Check 1 Did you try to print on a small paper size such as **4"x6" 10x15cm** or **Card** size?

➡ What to Do When Small Paper Sizes Are Jammed

Check 2 Is the jammed paper visible in the paper output slot (A)?

➡ Removing Jammed Paper through Paper Output Slot

Check 3 Are there any foreign objects in the feed slot of the rear tray (B)?

➡ What to Do If Paper Is Not Fed/Output Normally

Check 4 Is the jammed paper visible in the feed slot (B)?

Remove any paper other than the jammed paper on the rear tray, and then check if the jammed paper is visible in the feed slot.

➡ Removing Jammed Paper through Feed Slot

Check 5 If the jammed paper is not visible in the paper output slot or the feed slot.

➡ Removing Jammed Paper inside Printer

Removing Jammed Paper through Paper Output Slot

1. Hold jammed paper firmly with both hands and pull it out slowly.

   Slowly pull out the paper so as not to tear it.

Note

- If you cannot pull out the paper, turn the printer back on without pulling forcibly. The paper may be ejected automatically.

  Press the printer's **Stop** button to stop printing, and then turn off the printer.

- If the paper cannot be pulled out or is torn, open the printer's scanning unit / cover and remove jammed paper inside the printer.

  ➡ Removing Jammed Paper inside Printer

2. Press printer's **OK** button.

   The printer resumes printing. Reprint the page you were printing if it was not printed properly due to the paper jam.

   If you turned off the printer in step 1, all jobs in the print queue are canceled. Redo the printing.

Note

- When reloading the paper, make sure you are using suitable paper and loading it correctly.
- We recommend using paper sizes other than A5 to print documents with photos or graphics. A5 paper may curl and jam as it leaves the printer.

If the measures above do not solve the problem, a bit of paper may remain in the printer. See Removing Jammed Paper inside Printer.

Removing Jammed Paper through Feed Slot

1. Hold jammed paper firmly with both hands and pull it out slowly.

   Slowly pull out the paper so as not to tear it.

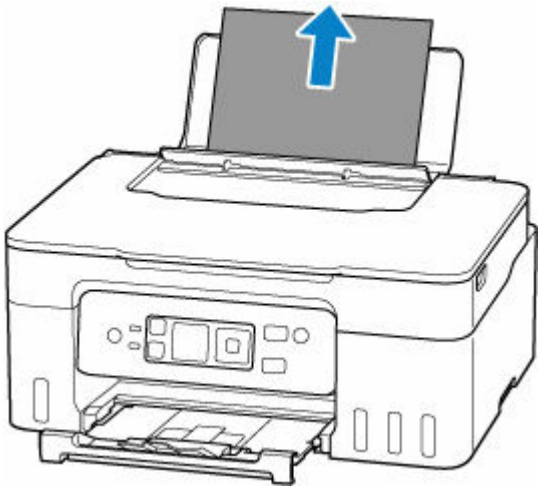

Note

- If the paper cannot be pulled out or is torn, open the scanning unit / cover and remove the jammed paper inside the printer.

  ➡ Removing Jammed Paper inside Printer

2. Load paper in rear tray.

➡ Loading Photo Paper / Plain Paper
➡ Loading Envelopes

Note

- Make sure you are using suitable paper and loading it correctly.
- We recommend using paper sizes other than A5 to print documents with photos or graphics. A5 paper may curl and jam as it leaves the printer.

3. Press printer's **OK** button.

The printer resumes printing. Reprint the page you were printing if it was not printed properly due to the paper jam.

If the measures above do not solve the problem, a bit of paper may remain in the printer. See Removing Jammed Paper inside Printer.

Removing Jammed Paper inside Printer

1. Press printer's **Stop** button.

2. Turn off printer and unplug it.

3. Open scanning unit / cover.

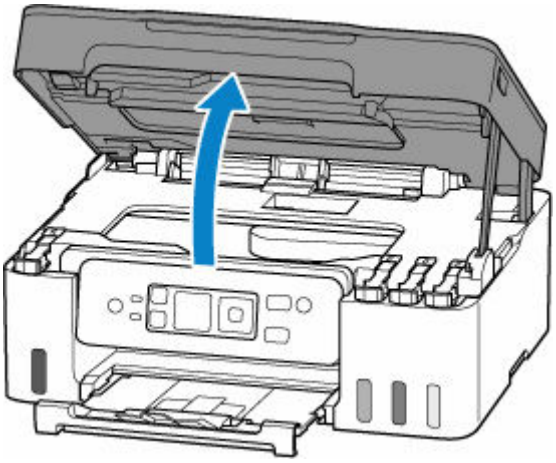

Important

- Do not touch the clear film (A), white belt (B), or tubes (C).

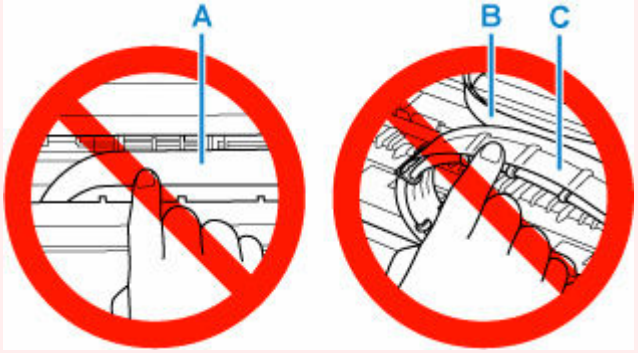

If you soil or scratch this part by touching it with paper or your hand, it could damage the printer.

4. Check if jammed paper is under print head holder.

If the jammed paper is under the print head holder, move the print head holder to the far right or left, whichever makes it easier to remove the paper.

When moving the print head holder, hold the print head holder and slide it slowly to the far right or left.

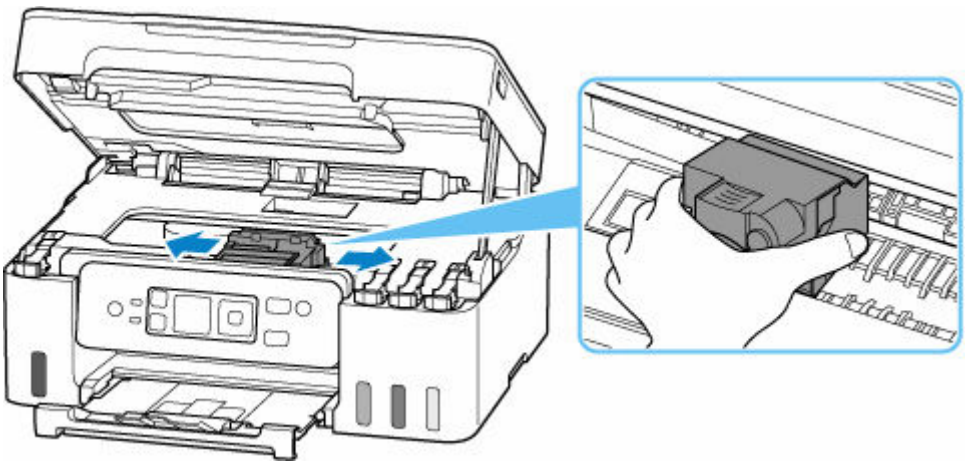

5. Hold jammed paper firmly with both hands.

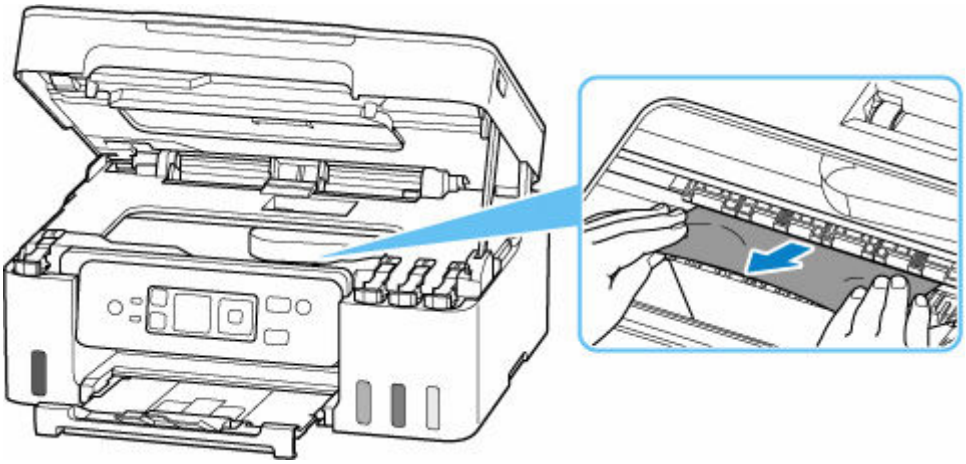

If the paper is rolled up, pull it out and grasp the edges of the paper.

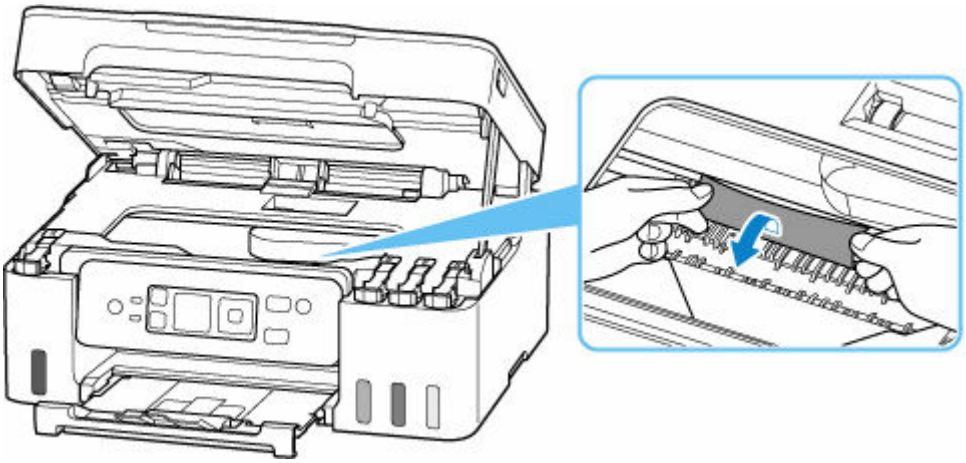

6. Slowly pull out jammed paper so as not to tear it.

Pull out the paper at an angle of about 45 degrees.

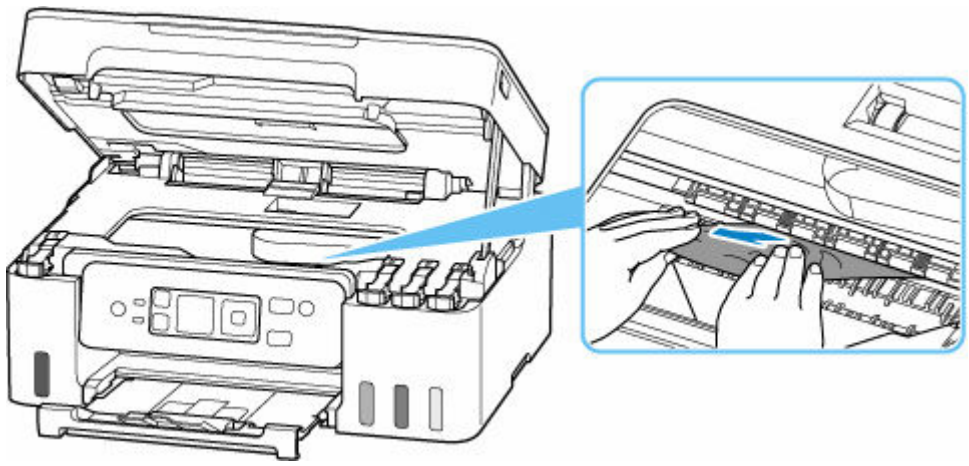

7. Make sure all jammed paper is removed.

If the paper tears when you pull out it, a bit of paper may remain in the printer. Check the following and remove any remaining paper.

- Any paper left under the print head holder?
- Any small bits of paper left in the printer?
- Any paper left in the left and right empty spaces (D) in the printer?

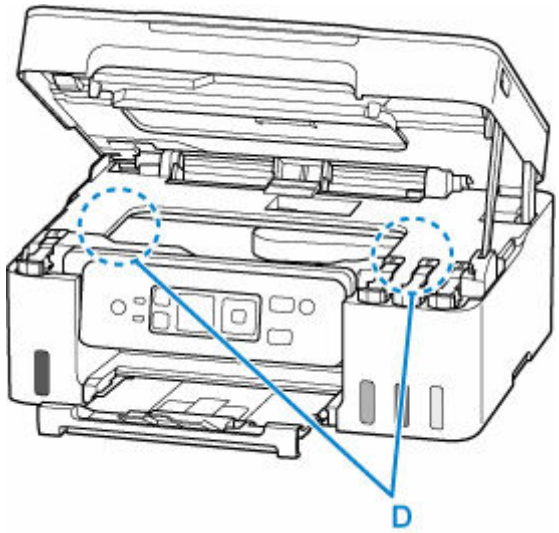

8. Close scanning unit / cover.

To close the scanning unit / cover, lift it up slightly and then lower it gently.

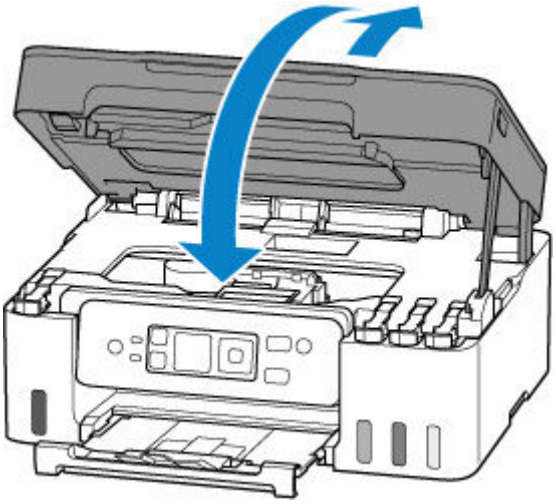

9. Plug printer back in and turn printer back on.

10. Load paper.

    - Loading Photo Paper / Plain Paper
    - Loading Envelopes

    Note

    - Make sure you are using suitable paper and loading it correctly.
    - We recommend using paper sizes other than A5 to print documents with photos or graphics. A5 paper may curl and jam as it leaves the printer.

11. Redo printing.

    All jobs in the print queue are canceled. Redo the printing.

    Note

    - If the 1300 error recurs, check the feed slot of the rear tray again. If a foreign object is in the rear tray, refer to Check 1 in What to Do If Paper Is Not Fed/Output Normally and take appropriate action.

If the measures above do not solve the problem, contact your nearest Canon service center to request a repair.

Important

- Do not tilt the printer when moving it since the ink may leak out.
- When transporting the printer for repairing it, see Repairing Your Printer.

1000

Cause

Possible causes include the following.

- There is no paper in the rear tray.
- Paper is not loaded in the rear tray properly.
- There are any foreign objects in the rear tray.

What to Do

- After loading the paper in the rear tray correctly, follow the messages displayed on the printer's LCD.

  ➡ Loading Photo Paper / Plain Paper
  ➡ Loading Envelopes

- If a foreign object is in the rear tray, refer to Check 1 in What to Do If Paper Is Not Fed/Output Normally and take appropriate action.

1200

Cause

Scanning unit / cover is open.

What to Do

Close the scanning unit / cover and wait for a while.

Make sure to close the scanning unit / cover after refilling ink or other operations.

1368

Cause

Replace Ink in Print Head cannot be performed because the maintenance cartridge is almost full.

What to Do

To perform Replace Ink in Print Head, first turn off the printer and then replace the maintenance cartridge.

➡ Replacing the Maintenance Cartridge

Press the printer's **OK** button to cancel the error.

1496

Cause

The maintenance cartridge may not be installed properly or may not be compatible with this printer.

What to Do

Remove the maintenance cartridge, and then reinstall it correctly.

Refer to Replacing the Maintenance Cartridge for details on removing and installing the maintenance cartridge.

1640

Cause

The remaining ink level in one of the ink tanks may have reached the lower limit line shown on the ink tank.

What to Do

To check the remaining ink level, visually inspect the remaining ink in the ink tank.

If the remaining ink level is below the lower limit line, refill the ink tank with the corresponding color of ink by following the printer's instructions.

➡ Refilling Ink Tanks

If printing is continued when the remaining ink level is below the lower limit line, the printer may consume a certain amount of ink to return to printable status.

Please be advised that Canon shall not be liable for any malfunction or trouble caused by using non-genuine Canon ink.

1723

Cause

The maintenance cartridge is not installed.

What to Do

Install the maintenance cartridge.

Refer to Replacing the Maintenance Cartridge for details on installing the maintenance cartridge.

1724

Cause

The currently installed maintenance cartridge cannot be used.

This printer cannot use maintenance cartridges that have been installed in other printers.

What to Do

Replace with a new maintenance cartridge.

➡ Replacing the Maintenance Cartridge

1725

Cause

The maintenance cartridge may not be installed properly or may not be compatible with this printer.

What to Do

Remove the maintenance cartridge, and then reinstall it correctly.

Refer to Replacing the Maintenance Cartridge for details on removing and installing the maintenance cartridge.

1726

Cause

The maintenance cartridge is full.

What to Do

Turn off the printer and then replace the maintenance cartridge.

➡ Replacing the Maintenance Cartridge

Note

- The condition of the maintenance cartridge when this error is displayed will depend on where and how the printer is used.

  When this message is displayed, you must replace the maintenance cartridge.

1727

Cause

The maintenance cartridge is almost full.

What to Do

The printer will not be able to print with a full maintenance cartridge.

Press the printer's **OK** button to cancel the error and then prepare a new maintenance cartridge.

For details on the maintenance cartridge, see Replacing the Maintenance Cartridge.

2114

Cause

An incompatible print setting combination has been specified for the paper loaded in the rear tray.

Note

- To disable notifications for this error, disable the function to detect paper setting mismatch.

What to Do

To specify the appropriate print settings for the paper loaded in the rear tray and retry printing, follow the steps below.

1. Press printer's **OK** button.

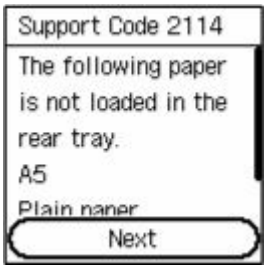

2. Select **Cancel print** with printer's ▲▼ buttons and press **OK** button.

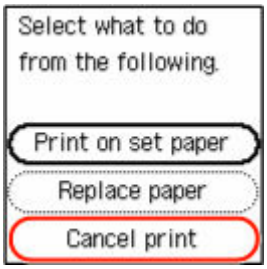

3. Reload paper in rear tray.

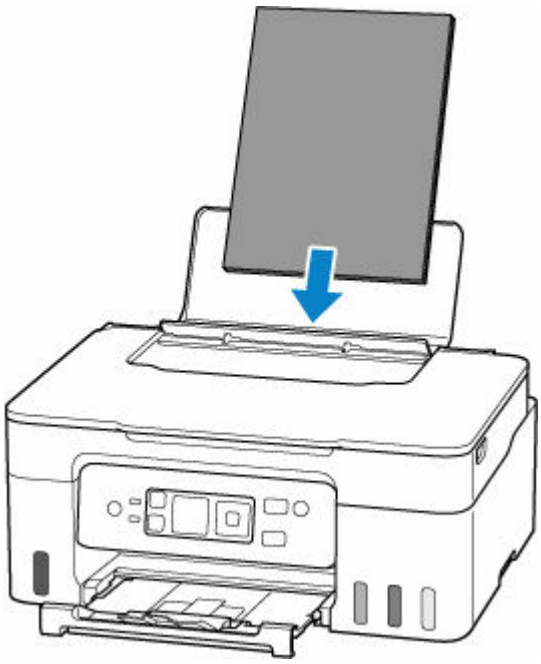

4. Check paper information (paper size and media type).

   The paper information is used in the print settings that you specify when you redo the printing in step 5.

   After checking the paper information (paper size and media type), select **OK** with the printer's ▲▼ buttons and press the **OK** button.

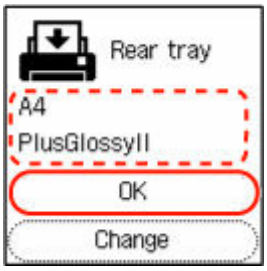

5. Redo printing.

Note

- For the proper combination of paper size and media type, see below.

  ➡ Paper Settings on the Printer Driver and the Printer (Paper Size)
  ➡ Paper Settings on the Printer Driver and the Printer (Media Type)

Other Measures

Load paper specified in print settings

To replace the paper in the rear tray with paper suitable for the print settings and continue printing, follow the steps below.

1. Check print settings, and press printer's **OK** button.

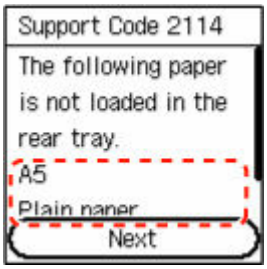

2. Select **Replace paper** with printer's ▲▼ buttons and press **OK** button.

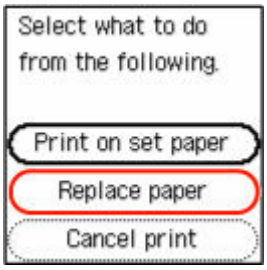

3. Load paper specified in print settings into rear tray.

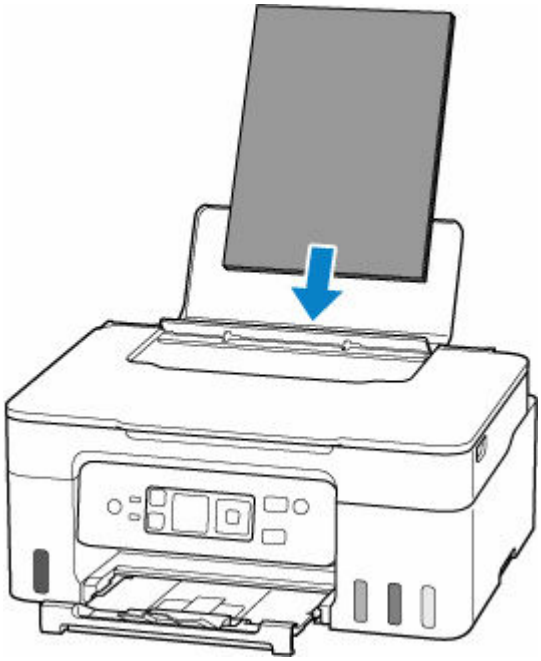

4. Register paper information (paper size and media type) in printer.

   Select **Change** with the printer's ▲▼ buttons and press the **OK** button, and then register the paper information (paper size and media type) of the paper loaded in the rear tray to the printer correctly.

Print without changing paper and print settings

For example, to continue printing with a mismatch between the paper loaded in the rear tray and the paper information registered in the printer, follow the steps below.

Important

- The printed result may not be the intended color or size.

1. Press printer's **OK** button.

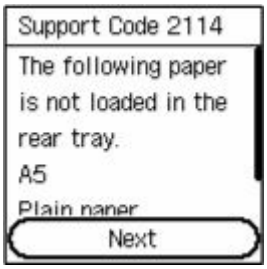

2. Select **Print on set paper** with printer's ▲▼ buttons and press **OK** button.

Note

- Depending on your printer's settings, **Print on set paper** may not be displayed.

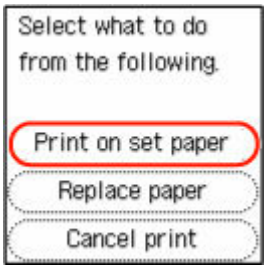

Disable notifications for 2114 error

To disable the function to detect paper setting mismatch, follow the steps below.

1. Use printer's ▲▼ buttons to scroll printer's **HOME** screen and select **Settings**, and press **OK** button.

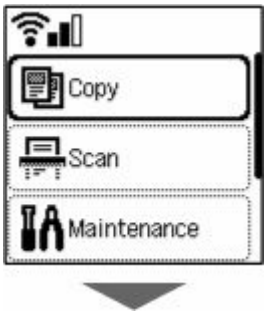

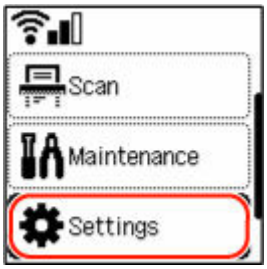

2. Select **Feed settings** and press **OK** button.

3. Select **Detect paper setting mismatch** and press **OK** button.

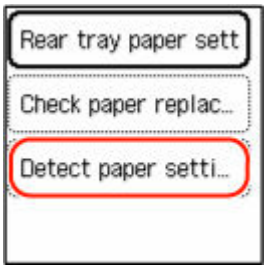

4. Select **Disable** and press **OK** button.

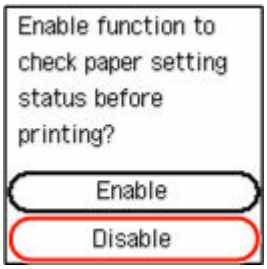

2200

Cause

An internal part will need replacing soon.

What to Do

Press the printer's **OK** button to cancel the error.

You cannot replace the internal parts of the printer yourself. Contact your nearest Canon service center to request a repair as soon as possible.

Important

- Do not tilt the printer when moving it since the ink may leak out.
- When transporting the printer for repair, see Repairing Your Printer.

2900

Cause

Scanning print head alignment sheet failed.

What to Do

Press the printer's **OK** button to cancel the error and take the corresponding actions below.

- Make sure the print head alignment sheet is set in the correct position and orientation on the platen.
- Make sure the platen and the print head alignment sheet are not dirty.
- Load A4 or Letter size plain paper in the rear tray.
- Check the print head condition by printing the nozzle check pattern.

After carrying out the above actions, perform automatic print head alignment again.

If the error recurs after taking the above actions, press the printer's **OK** button to cancel the error and perform manual print head alignment.

➡ Adjusting Print Head Position Manually (Windows)

2901

Cause

Print head alignment pattern has been printed and printer is waiting to scan sheet.

What to Do

Scan the printed alignment pattern.

1. Load print head alignment sheet on platen.

   Place the printed side down and align the mark ◤ in the upper left corner of the sheet with the alignment mark ⧉.

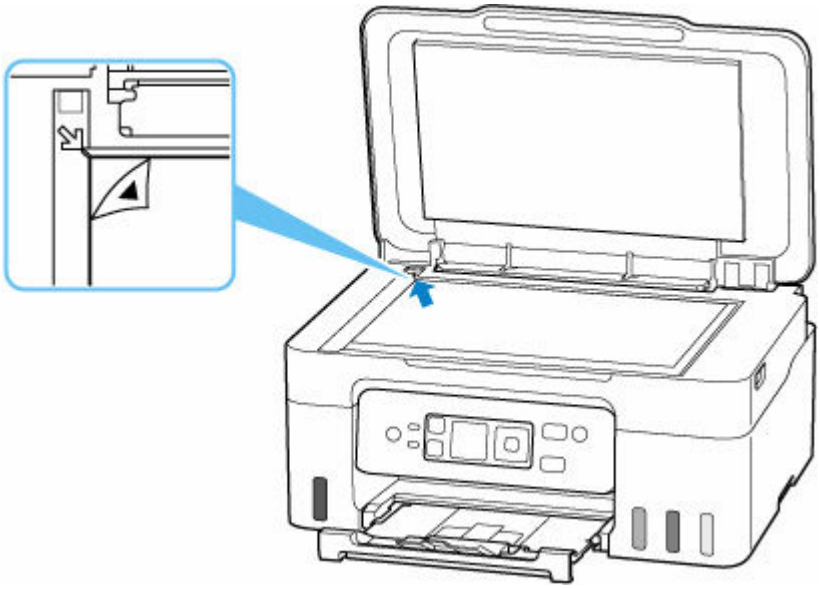

2. Slowly close the document cover and press printer's **Color** button or **Black** button.

   The printer starts scanning the print head alignment sheet and automatically adjusts the print head position.

3252

Cause

The maintenance cartridge is almost full.

What to Do

The printer will not be able to print with a full maintenance cartridge.

Press the printer's **OK** button to clear the error message.

4103

Cause

Cannot perform printing with current print settings.

What to Do

Press the printer's **Stop** button to cancel printing.

Change the print settings specified when printing and retry printing.

5100

Cause

Printer error has occurred.

What to Do

Cancel printing and turn off the printer.

Check the following:

- Make sure print head holder motion is not impeded by protective material, jammed paper, etc.

  Remove any impediment.

  Important

  - When clearing an impediment to print head holder motion, be careful not to touch clear film (A), white belt (B), or tubes (C).

    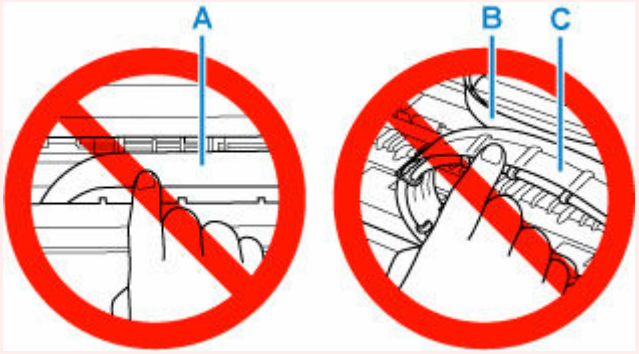

    If you soil or scratch this part by touching it with paper or your hand, it could damage the printer.

Turn the printer back on.

If this does not solve the problem, contact your nearest Canon service center to request a repair.

Important

- Do not tilt the printer when moving it since the ink may leak out.
- When transporting the printer for repairing it, see Repairing Your Printer.

5200

Cause

Printer error has occurred.

What to Do

Important

- Perform all of the following steps in order.

  Changing the order or omitting steps may cause other problems.

1. Check the remaining ink level, and then refill the ink tanks if necessary.
2. Turn off printer and unplug it.
3. Plug in printer again and turn it back on.
4. Perform **Replace Ink in Print Head**.

   ➡ Replace Ink in Print Head

If the error recurs after taking the above actions, you may be able to resolve it by replacing the print heads.

For details, click here.

Important

- If the error recurs after replacing the print heads, contact your nearest Canon service center to request a repair.
- Do not tilt the printer when moving it since the ink may leak out.
- When transporting the printer for repairing it, see Repairing Your Printer.

6000

Cause

Printer error has occurred.

What to Do

Turn off the printer and unplug it.

Plug in the printer again and turn it back on.

If this does not solve the problem, contact your nearest Canon service center to request a repair.

Important

- Do not tilt the printer when moving it since the ink may leak out.
- When transporting the printer for repairing it, see Repairing Your Printer.