ECOVACS DEEBOT T30e OMNI Robotic Vacuum Cleaner Instruction Manual

Contents Show



ECOVACS

DEEBOT T30e OMNI

For the Instruction Manual in further languages, visit: https://www.ecovacs.com.

IMPORTANT SAFETY INSTRUCTIONS

When using an electrical Appliance, basic precautions should always be followed, including the following:
READ ALL INSTRUCTIONS BEFORE USING THIS APPLIANCE
SAVE THESE INSTRUCTIONS

1. This Appliance can be used by children aged from 8 years and above and persons with reduced physical, sensory, or mental capabilities or lack of experience and knowledge if they have been given supervision or instruction concerning use of the Appliance in a safe way and understand the hazards involved. Children shall not play with the Appliance. Cleaning and user maintenance shall not be made by children without supervision.
2. Clear the area to be cleaned. Remove power cords and small objects from the floor that could entangle the Appliance.
3. Tuck rug fringe under the rug base, and lift items such as curtains and tablecloths off the floor.
4. If there is a drop off in the cleaning area due to a step or stairs, you should operate the Appliance to ensure that it can detect the step without falling over the edge. It may become necessary to place a physical barrier at the edge to keep the unit from falling. Make sure the physical barrier is not a trip hazard.
5. Only use as described in this manual. Only use attachments recommended or sold by the manufacturer.
6. For INDOOR household use ONLY. Do not use the Appliance in outdoor, commercial, or industrial environments.
7. Do not use without dust bin and/or filters in place.
8. Do not operate the Appliance in an area where there are lit candles or fragile objects.
9. Keep hair, loose clothing, fingers, and all parts of body away from any openings and moving parts.
10. Do not operate the Appliance in a room where an infant or child is sleeping.

12. Do not use Appliance on wet surfaces or surfaces with standing water.
13. Do not allow the Appliance to pick up large objects like stones, large pieces of paper, or any item that may clog the Appliance.

14. Do not use Appliance to pick up flammable or combustible materials such as gasoline, printer or copier toner, or use in areas where they may be present.
15. Do not use Appliance to pick up anything that is burning or smoking, such as cigarettes, matches, hot ashes, or anything that could cause a fire.
16. Do not put objects into the suction intake. Do not use if the suction intake is blocked. Keep the intake clear of dust, lint, hair, or anything that may reduce air flow.
17. If the power cord is damaged, it must be replaced by the manufacturer or its service agent in order to avoid a hazard.
18. Turn OFF the power switch before cleaning or maintaining the Appliance.
19. The lithium battery type suitable for CH2471B is Max. 8 cells, max. nominal voltage DC 14.4V, rated capacity 4,800mAh.The battery must be removed and discarded according to local laws and regulations before disposal of the Appliance.
20. Please dispose of used batteries according to local laws and regulations.
21. Do not incinerate the Appliance even if it is severely damaged. The batteries can explode in a fire.
22. The Appliance must be used in accordance with the directions in this Instruction Manual.
    Ecocars Home Service Robotics cannot be held liable or responsible for any damages or injuries caused by improper use.
23. The robot contains batteries that are only replaceable by skilled persons. To replace the robot's battery, please contact Customer Service.
24. Please make sure your power supply source voltage matches the power voltage marked on the OMNI Station.
25. Use only the original rechargeable battery and OMNI Station provided with the Appliance from the manufacturer. Non-rechargeable batteries are prohibited.
26. Take care not to damage the power cord. Do not pull on or carry the Appliance or OMNI Station by the power cord, use the power cord as a handle, close a door on the power cord, or pull power cord around sharp edges or corners.
    Do not run Appliance over the power cord.
    Keep power cord away from hot surfaces.
27. Do not use the OMNI Station if it is damaged.
    The power supply is not to be repaired and not to be used any longer if it is damaged or defective.

28. Do not use with a damaged power cord or receptacle. Do not use the Appliance or OMNI Station if it is not working properly, has been dropped, damaged, left outdoors, or come in contact with water. It must be repaired by the manufacturer or its service agent in order to avoid hazards.
29. The plug must be removed from the receptacle before cleaning or maintaining the OMNI Station.
30. Remove the Appliance from the OMNI Station, and turn OFF the power switch to the Appliance before removing the battery for disposal of the Appliance.
31. When not using the OMNI Station for a long period of time, please unplug it.
32. If the robot will not be used for a long time, power OFF the robot for storage and unplug the OMNI Station.
33. WARNING-Add clean water into the clean tank only.
34. WARNING: For the purposes of recharging the battery, only use the detachable supply unit CH2471B provided with the Appliance.

To satisfy RF exposure requirements, a separation distance of 20 cm or more should be maintained between this device and persons during device operation.

To ensure compliance, operations at closer than this distance is not recommended. The antenna used for this transmitter must not be co-located in conjunction with any other antenna or transmitter.

Device Update

Typically, some devices are updated bi-monthly, but not always so specific.

Some devices, especially those that went on sale more than three years ago, will only be updated if a critical vulnerability is found and fixed.

To check the current software version and enable automatic updates, go to Settings > Robot Advanced Settings > About Your Robot > Update in the app. The current version is displayed there; tap Update to enter the page and select

Automatic Update to enable it.

	Caution: hot surface
	Short-circuit-proof safety isolating transformer
	Switch mode power supply
	For indoor use only
	Direct current
	Alternating current
	Before charging, read the instructions.
	Polarity of the charging port
	Time-lag miniature fuse-link

The remote surveillance is for the absolute private use of non-public, private owned places for the pure self-protection and single control intended only. Please be aware of the local data protection based legal obligations in case of use. No surveillance of public places, especially with clandestine intent and/or on the part of the employer without justified reasons. Such not justified use is in the risk and responsibility of the user only.

Advertisements

European Union Compliance Statement Information on Disposal for Users of Waste Electrical & Electronic Equipment

 This symbol on the product or on its packaging indicates that used electrical and electronic products should not be mixed with unsorted municipal waste.

For proper treatment, it is your responsibility to dispose of your waste equipment by arranging to return it to designated collection points.

Disposing of this product correctly will help save valuable resources and

prevent any potential negative effects on human health and the environment, which could otherwise arise from inappropriate waste handling.
To return your used device, please use the return and collection systems or contact the retailer where the product was purchased, which is free of charge, please contact your local authority for further details of your nearest designated collection point.
Penalties may be applicable for incorrect disposal of this waste, in accordance with your national legislation.

Information on Disposal for Users of used batteries

 This symbol means that batteries and accumulators, at their end-of-life, should not be mixed with unsorted municipal waste. Your participation is an important part of the effort to minimize the impact of batteries and accumulators on the environment and on human health. For proper recycling you can return this product or the batteries or accumulators it contains to your supplier or to a designated collection point, which is free of charge.
Disposing of this product correctly will help save valuable resources and prevent any potential negative effects on human health and the environment, which could otherwise arise from inappropriate waste handling.
Penalties may be applicable for incorrect disposal of this waste, in accordance with your national legislation.
there are separate collection systems for used batteries and accumulators.
Please, dispose of batteries and accumulators correctly at your local community waste collection/recycling center.

Advertisements

Restriction of the use of certain hazardous substances (RoHS) Directive

Ecocars Home Service Robotics Co., Ltd. hereby declares the whole product including parts (cables, cords, and so on) meets the requirements of RoHS Directive 2011/65/EU and amendment Commission Delegated Directive (EU) 2015/863 on the restriction of the use of certain hazardous substances in electrical and electronic equipment ("RoHS recast" or "RoHS 2.0").

Radio Equipment Directive

Ecovacs Home Service Robotics Co., Ltd. hereby declares that the product listed in this section comply with the essential requirements and other relevant provisions of the Radio Equipment Directive 2014/53/EU.

Europe Authorised Representative:

CE ECOVACS Europe GmbH
Holzstrasse 2 | D-40221 Düsseldorf | Germany
Ecovacs Home Service Robotics Co., Ltd. here by declares that the product comply with the essential requirements and other relevant provisions of the RoHS Directive 2011/65/EU and amendment Commission Delegated Directive (EU) 2015/863, the Radio Equipment Directive 2014/53/EU.
The declaration of conformity can be viewed at the following address: **https://www.ecovacs.com/global/compliance**.

Advertisements

PACKAGE COMPONENTS

1 PACKAGE CONTENTS

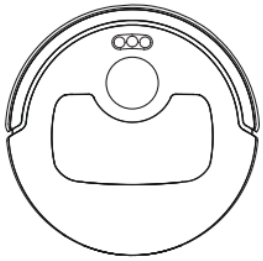

Robot

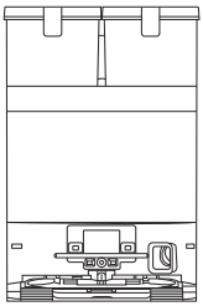

OMNI Station

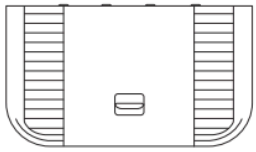

Base

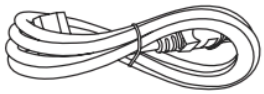

Power Cord



Side Brush



Instruction Manual

* Figures in this manual are for reference only and may differ from the appliance. Product design and specifications are subject to changes without notice.

2 PRODUCT DIAGRAM

Advertisements

Robot

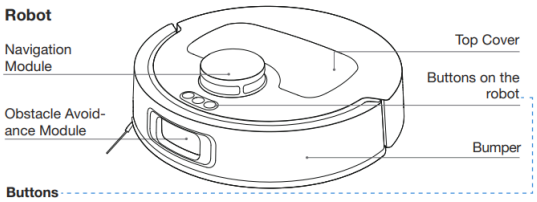

Buttons

Press: Return to the station (Robot not in the station) Press and hold: Self-Cleaning

Press: Toggle Start/Pause/Continue Press and hold: Power on/Power off

Press: Start/End spot cleaning Press and hold: Activate/Deactivate the child lock

Inside the Robot (Under the Top Cover)

RESET Button
Network Setup: Press the RESET button, and you will hear a voice prompt to connect the robot with the APP.
Restore Default Settings: Press the RESET button and hold for 5 s. After you hear the voice pormpt, the startup music will play, and the robot will be restored to the default settings.

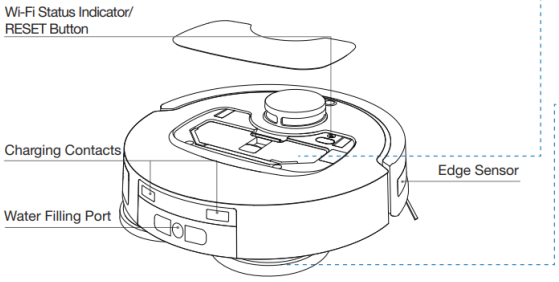

Bottom Back View

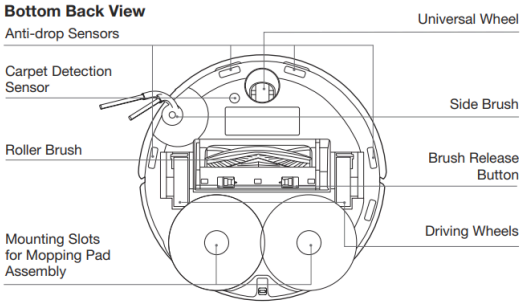

Dust Bin

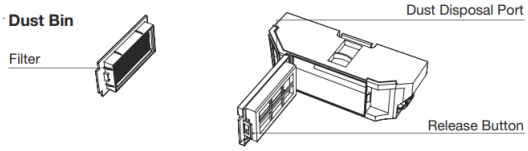

Mopping Pad Assembly

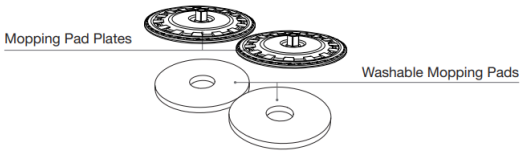

OMNI Station

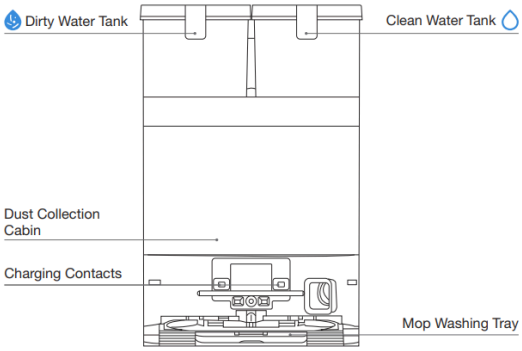

Note:

- If the robot fails to charge, please wipe charging contacts with a clean and dry cloth.

OMNI Station (Back)

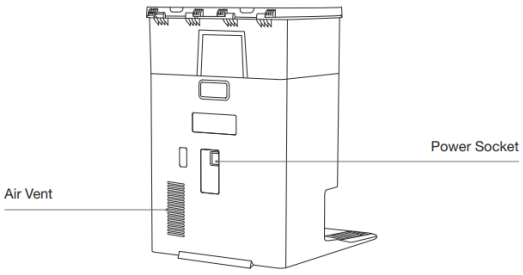

Dust Bag

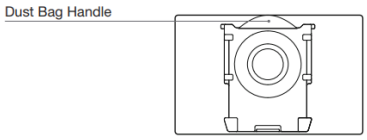

Advertisements

3 Indicator Light

	Light Effect	State
Robot	Breathing White	Charging
	Solid White	Fully Charged/Running
	Solid Red	Low Battery
	Flashing Red	Robot Alarm
	Breathing Red	Station Alarm

4 Sensors Overview

Name	Functional Description
Navigation Module	Laser Ranging is applied to measure the distance between the robot and surrounding objects based on the time difference of reflection, allowing the module to map against the objects around while the robot is moving. The detection range is 8 m.
Obstacle Avoidance Module	Laser Ranging and triangulation are used to measure the distance between the robot and surrounding obstacles. The sensor emits laser beams and receives the reflected light from obstacles ahead. When an obstacle is detected within close range, the robot automatically turns to avoid it. The detection range is 0.3 meters.
Anti-drop Sensors	With Infrared Ranging, the distance between the robot's bottom and the ground is detected by the infrared sensors at the bottom. The robot will not move forward when there are stairs in front (such as when the height of the white surface is 55 mm or more, or the height of the black surface is 30 mm or more) and the identified exceeds the preset one, enabling the Anti-drop function.
Carpet Detection Sensor	The sensor emits 300 kHz ultrasound, which energy will be absorbed by the carpet, causing the echoed energy to be lower than the threshold. The robot thereby detects the carpet's presence. In the ECOVACS laboratory, more than 50 types of carpets available on the market are identified.

Anti-collision Sensor	With the principle of the Optocoupler Switch, the robot will avoid obstacles when they are about to collide.
Edge Sensor	With Infrared Ranging, the edge sensor detects the distance between the robot and objects on the side. When there is a wall or obstacles on the right, the robot performs edge cleaning to avoid missing any spots and prevent collisions.

INITIAL SETUP AND USE

Advertisements

1 Notes Before Cleaning

Tidy up the Area to be Cleaned

For the maximum cleaning area possible, before using the robot, please put furniture, such as tables, chairs, and pedestal fans, in their proper place and put away low-lying items, such as weight scales.

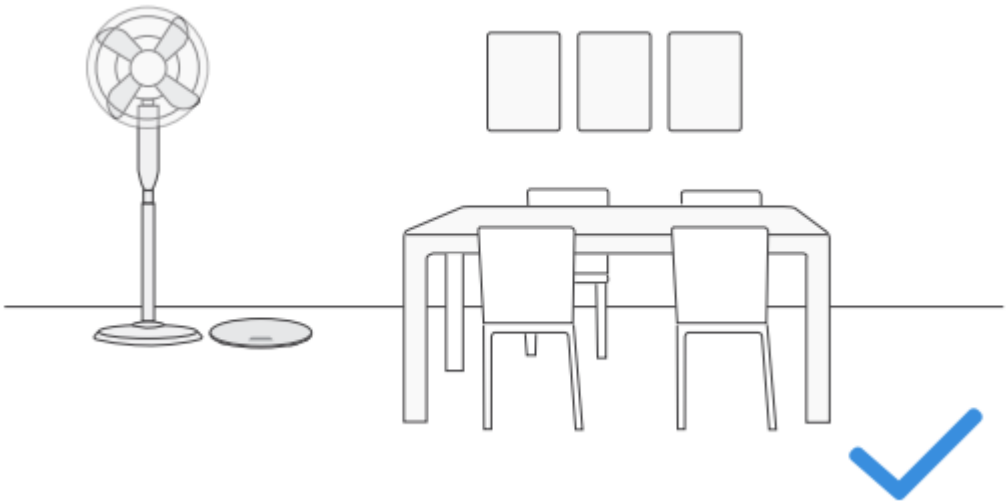

Prevent robot from Falling

Place a physical barrier at the edge of a drop, such as staircases and steps, to stop the robot from falling over the edge.

Advertisements

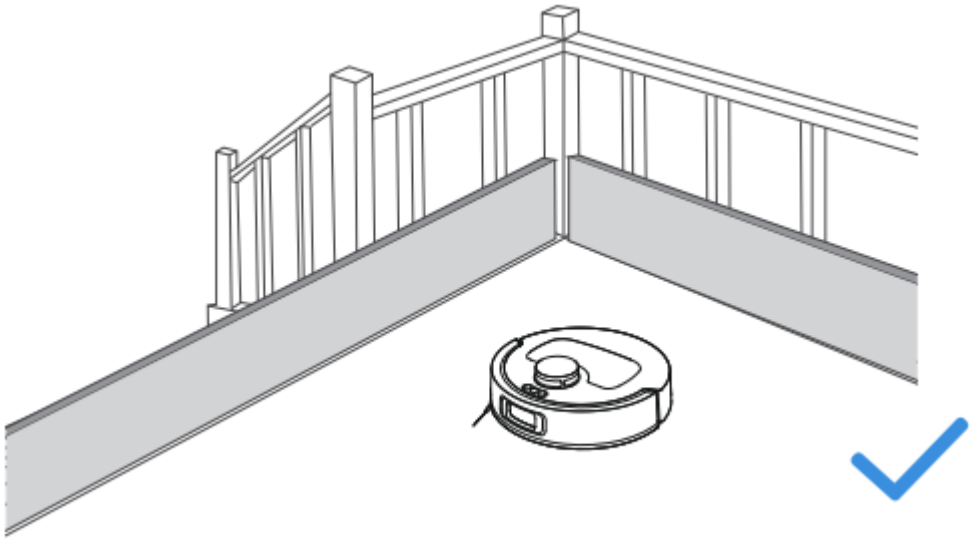

Open Doors and Help robot Explore

Open all room doors to help the robot fully explore your house during the first cleaning.

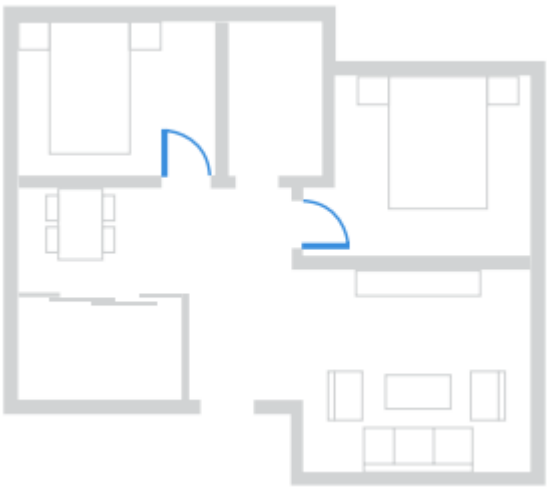

	To improve cleaning efficiency, please remove objects, including cables, clothes, and slippers, from the floor.
	Before using the product on a carpet with tasseled edges, please fold the tassels under the carpet.
	Please do not stand in narrow spaces, such as hallways, to avoid blocking True Mapping.

2 Quick Start

Remove all protective materials before using.

1. Installation

The sound of “click” indicates proper installation.

Advertisements

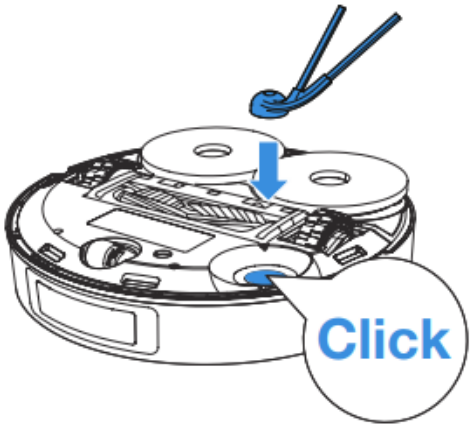

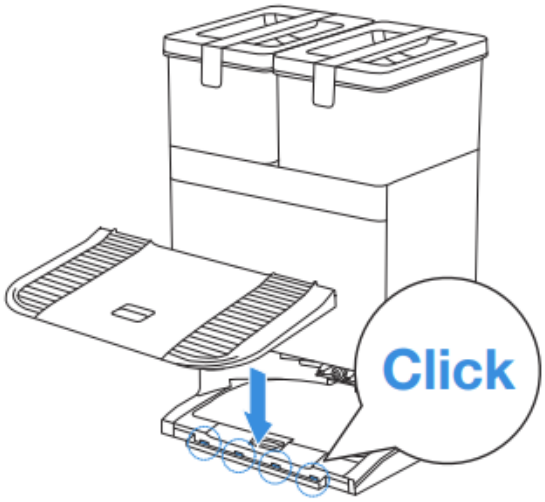

2. Assemble and Place the Station

Place the OMNI Station against the wall on a flat, hard surface. Do not place items within 0.05 meters on either side and 0.8 meters in front.

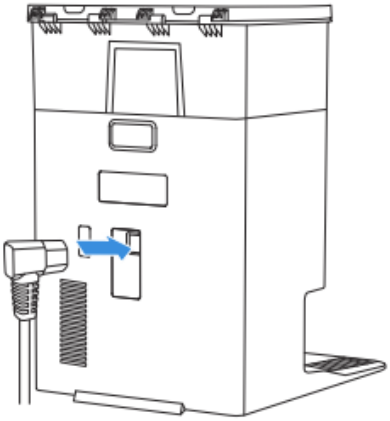

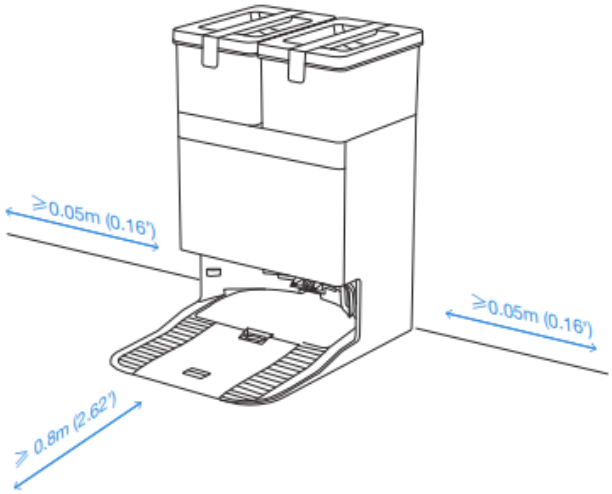

Advertisements

- If there are reflective objects such as mirrors and reflective skirting lines near the Station, the bottom 14 cm of such objects should be covered.
- Do not place the Station under direct sunlight.
- Place the station in a location with a strong Wi-Fi signal for better user experience.

- Do not use the appliance on wet surfaces or surfaces with standing water.
- Do not wipe the robot and the station with a damp cloth or use any liquid.

3 Download the ECOVACS HOME APP

To enjoy all available features, it is recommended that you control your robot via the ECOVACS HOME App.

1. Scan the QR Code under the Top Cover to download the App.

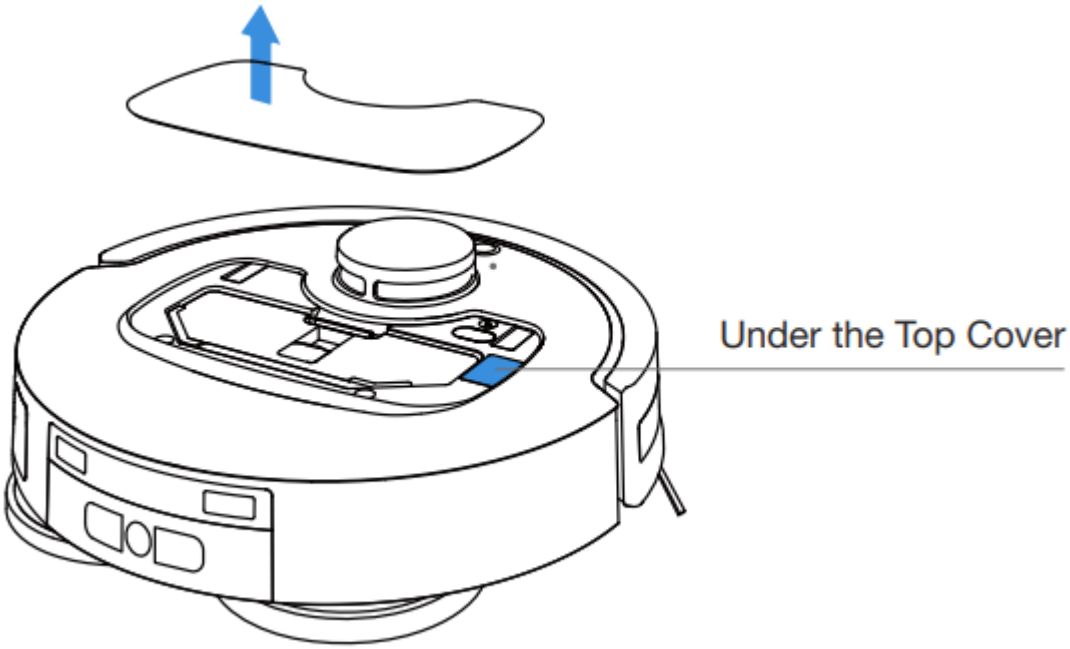

Advertisements

2. Search “ECOVACS HOME” on the App Store or Google Play to download the App.



Note: Follow the instructions on the App to complete the registration, login, and connection.

4 Power on Robot

1. Turn on the power switch and place the robot in front of the station that is connected to power supply.

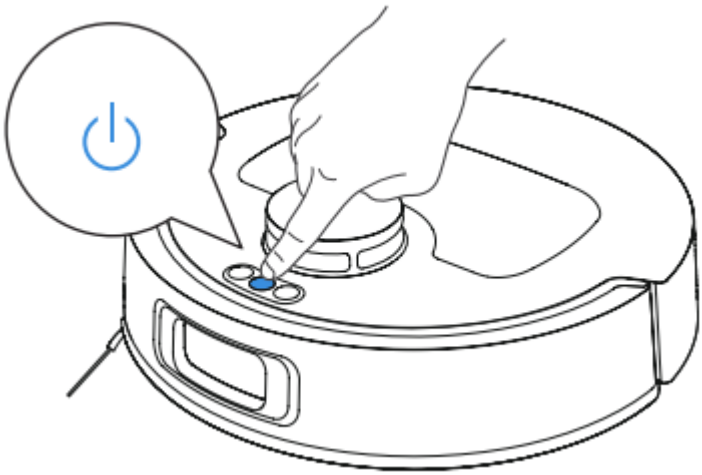

5 Connect robot with APP

Advertisements

Name	Description
Infrared interface	The infrared interface is turned off by default, and it is activated when the robot is in the charging station. When the DEEBOT is in the charging station, it will communicate with the charging station through the infrared interface.
WI-FI*	Facilitate data transfer between the app and the robot, enabling control of the robot through the app.
ECOVACS HOME App	ECOVACS products offer smart functions such as network setup, mapping, and cleaning mode selection (specific to each product). To utilize these features, users need to download and use the official ECOVACS Home App.

- The robot series robotic vacuums are designed for domestic cleaning scenarios. A home Wi-Fi network is required for operation, and anti-DDoS protection can be configured by users through route settings.

Advertisements

Wi-Fi Network Requirements:

- You are using a 2.4 GHz or 2.4/5 GHz mixed network.
- Your router supports 802.11b/g/n and IPv4 protocol.
- Do not use a VPN (Virtual Private Network) or Proxy Server.
- Do not use a hidden network.
- WPA and WPA2 use TKIP, PSK, and AES/CCMP encryption.
- WEP EAP (Enterprise Authentication Protocol) is not supported.
- Use Wi-Fi channels 1-11 in North America and 1-13 outside North America (refer to local regulatory agency).
- If you use a network extender/repeater, the network name (SSID) and password are the same as your primary network.
- Please enable WPA2 on your router.

Wi-Fi Indicator Light

Slow flashing white light	Disconnected from Wi-Fi
Fast flashing white light	Connecting
Steady white light	Connected to Wi-Fi

Please be aware that intelligent features such as remote startup, voice interaction, 2D/3D map display and control settings, and personalized cleaning (depending on the Appliance) require the ECOVACS HOME App, which is constantly updated. You need to agree to our Privacy Policy and User Agreement so that we can process some of your essential and necessary information before you can use certain features of the ECOVACS HOME App to control the Appliance. If you disagree with our Privacy Policy and User Agreement, such features will be unavailable.
However, you can still use the basic features of this Appliance for manual operation.

Advertisements

6 Power on and Charge the robot

Use the ECOVACS HOME App to recall the robot, or press on the robot to allow it to dock for charging.

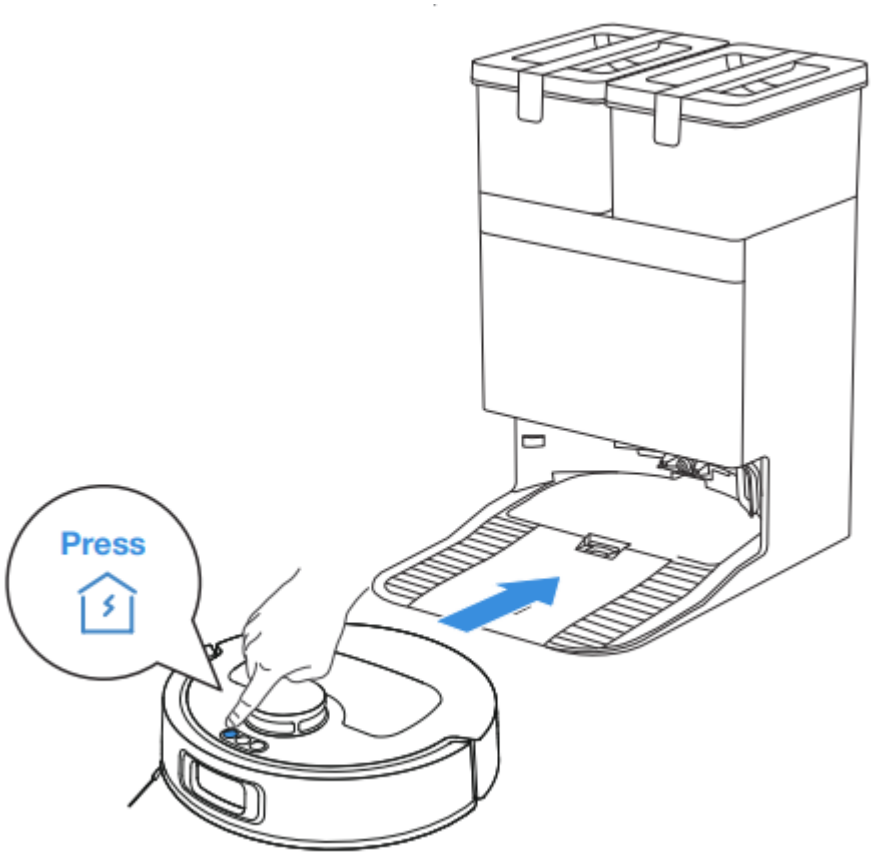

Note:

- When the robot is not in use, keep it powered on and charging.
- It is recommended to start cleaning from the station. Do not move the station while cleaning.

7 Fill the Clean Water Tank

Take out the clean water tank, open the tank cover, and fill the tank with water up to the maximum water level. Close the tank cover and re-install the clean water tank.

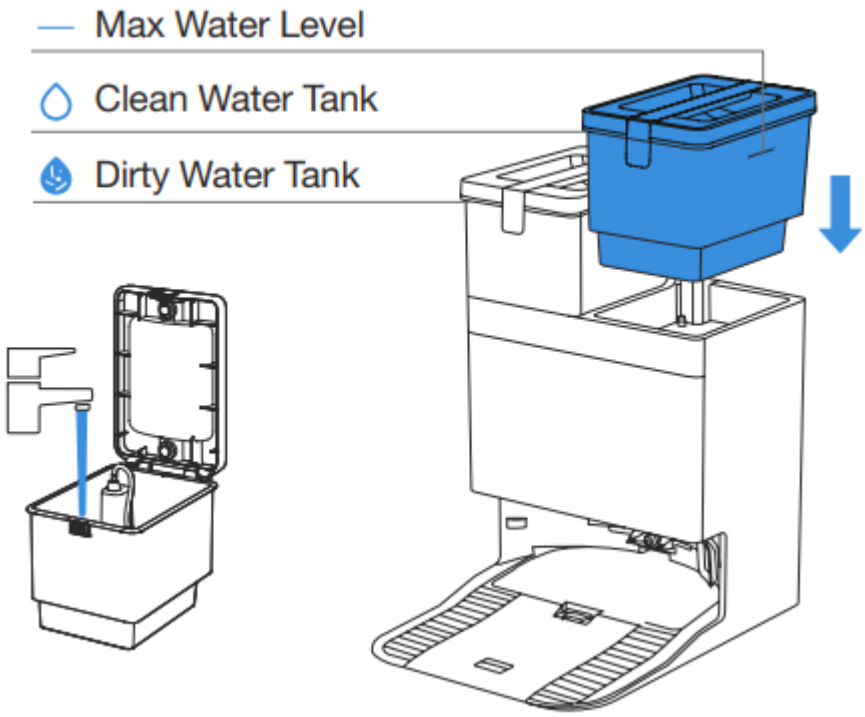

Note:

- Use a clean, dry cloth to wipe off any water on the surface of the tank before placing it in position.
- Make sure to lock the top covers of both water tanks securely before use.
- Any water marks in the water tanks are from function testing. Please use it with confidence.

8 Operate the robot

1. Start Mapping

When creating a map for the first time, please follow the robot to help resolve some minor issues.

For example, the robot may get stuck under furniture. Please refer to the following solutions:

① Raise the low-sitting furniture if possible;
② Cover the bottom of the furniture;
③ Set up a virtual boundary via the App.

2. Start Cleaning

- The robot's water tank is automatically refilled through the station. Manual refilling is not needed.
- When mopping, the robot will recognize floor types and is able to lift mops automatically when encountering carpets. Please do not use the robot on shaggy rugs or carpets with fibres longer than 9 mm. It is recommended to fold up the shaggy rugs with fibres longer than 9 mm during the cleaning process, or set the shaggy carpeted area as a no-entry zone by setting virtual boundary in the ECOVACS HOME App.

Please ensure that the robot is in the station and is fully charged before cleaning for the first time. Tap ⏻ on the robot to start. You can also use the ECOVACS HOME App to start.

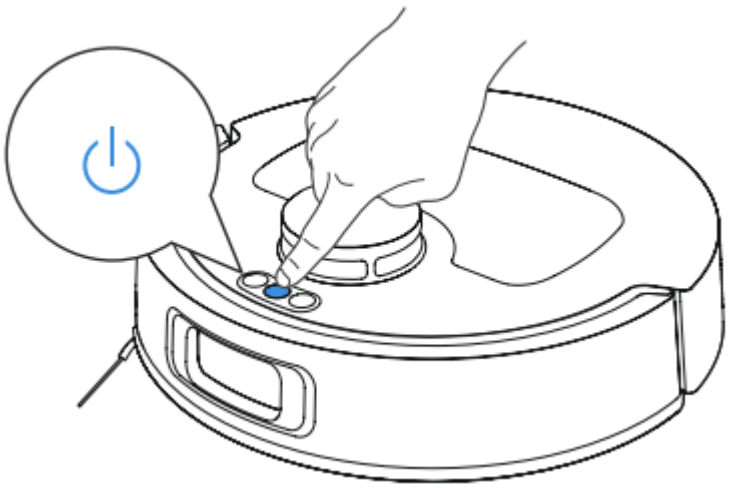

Note:

- Do not frequently remove washable mopping pads.
- Do not scratch the mopping pad plates with a rag or other objects.
- Replace the mopping pads in time as prompted by the App. Explore more accessories in the ECOVACS HOME App or at **https://www.ecovacs.com**.

3. Pause

Tap on the robot to pause it while it is working. You can also use the ECOVACS HOME App to pause the robot.

4. Wake up

After pausing for a while, all indicator lights on the robot will go out. To wake up the robot, press .

5. Back to Station

Use the ECOVACS HOME App to recall the robot, or press the button on the robot to allow the robot to dock for charging.

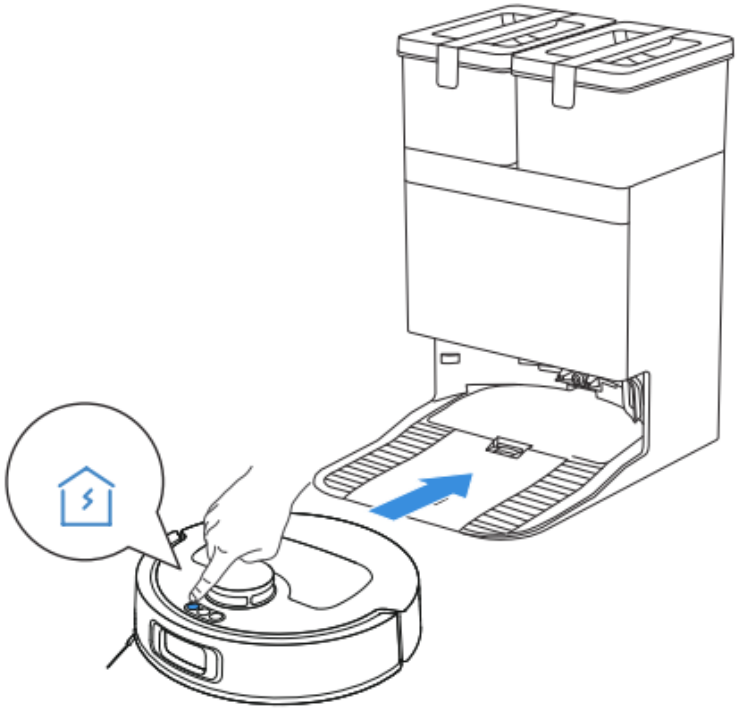

6. Deep Sleep Mode

The robot will enter deep sleep mode if it stays outside the station for about 10 h to protect the battery. Please switch OFF and ON to wake the robot up.

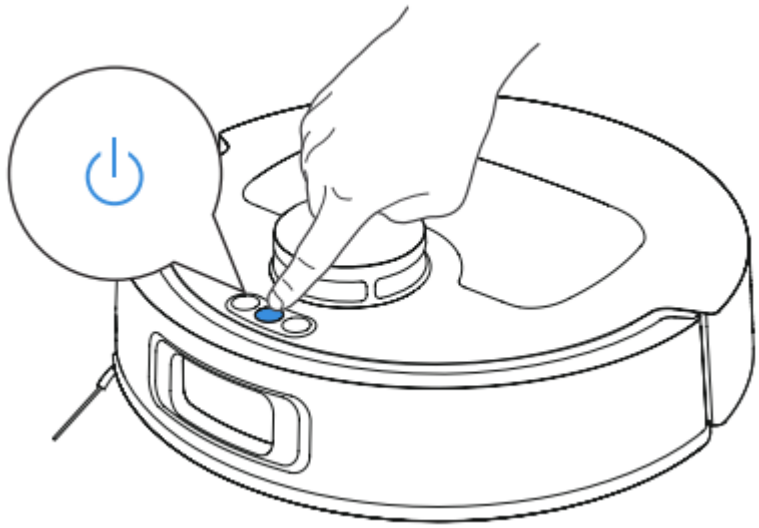

REGULAR MAINTENANCE

1 Maintenance Frequency

To keep robot running at peak performance, perform maintenance and replace parts at the following frequencies:

Robot Part	Maintenance Frequency	Replacement Frequency
Washable Mopping Pads	/	Every 1-2 months
Dust Bag	/	When App prompts
Side Brush	Every 2 weeks	Every 3-6 months
Main Brush	Every week	Every 6-12 months
Filter	Every week	Every 3-6 months
Edge Sensor Universal Wheel Anti-drop Sensors Bumper Charging Contacts on robot Charging Contacts on OMNI Station Navigation Module Obstacle Avoidance Module	Approx. every month	/
Clean Water Tank	Every 3 months	/
Dirty Water Tank	Every month	/
Dust Collection Cabin	Every month	/
Body and Bottom of the Station	Every month	/

Note: Explore more accessories in the ECOVACS HOME App or at **https://www.ecovacs.com**.

2 Maintain Dust Bin and Filter

1. Open the cover and empty the bin.

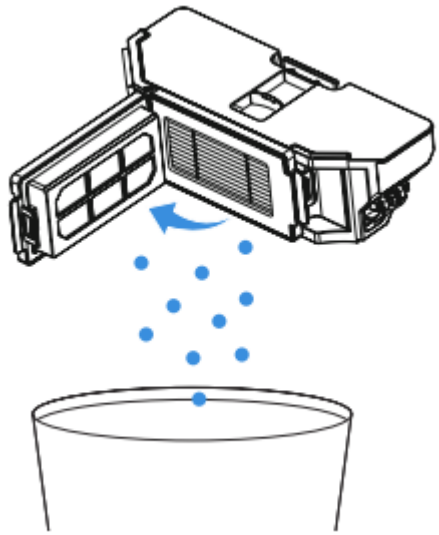

2. Open the filter net and remove the filter.

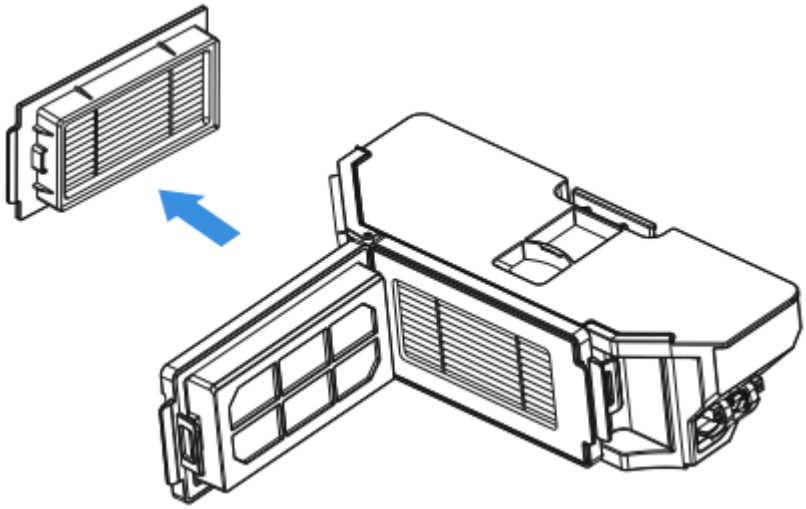

3. Clean the dust from both sides of the filter net.

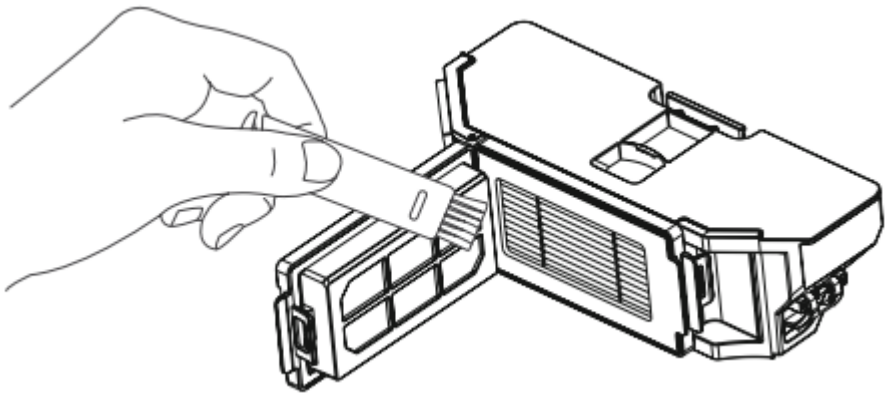

4. Rinse the dust bin and filter with water and shake off the water droplets.

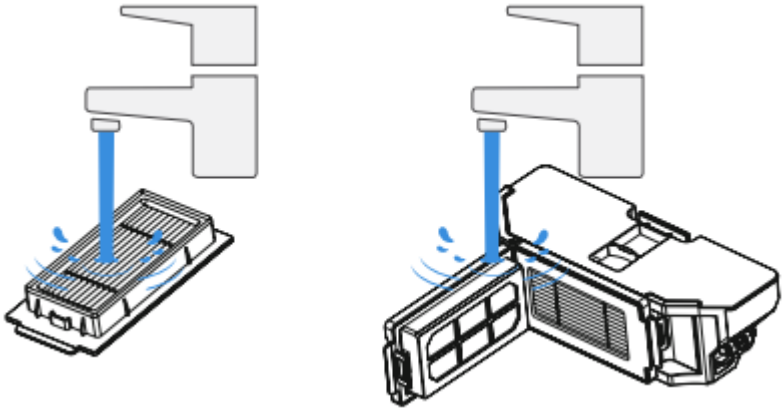

Note:

- Please rinse the filter with water as shown.
- Do not use fingers or a brush to clean the filter.

5. Air dry.

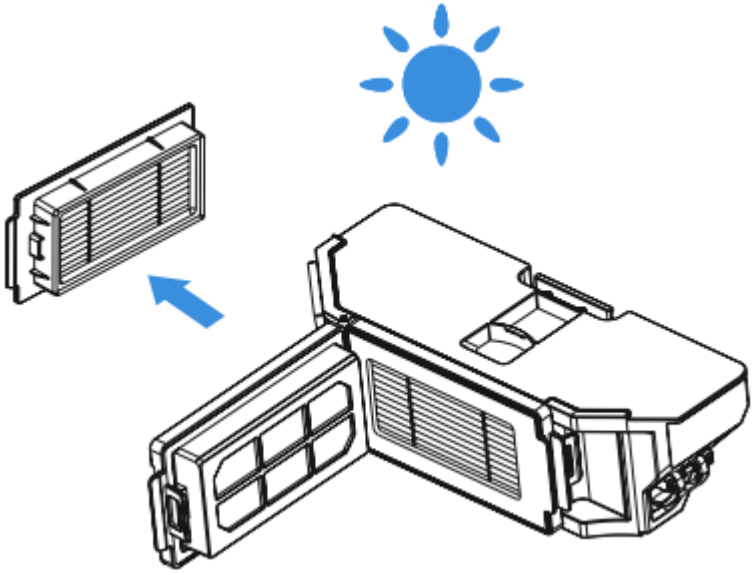

Note:
• Completely dry the filter before use.

3 Maintain Main Brush and Side Brush

Note: Explore more accessories at ECOVACS HOME App or at https://www.ecovacs.com

Clean the Roller Brush

1. Open the cover.

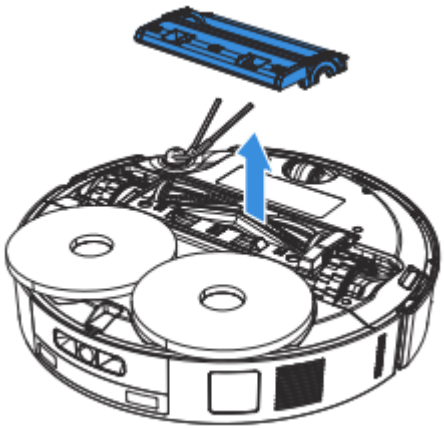

2. Remove and clean the main brush.

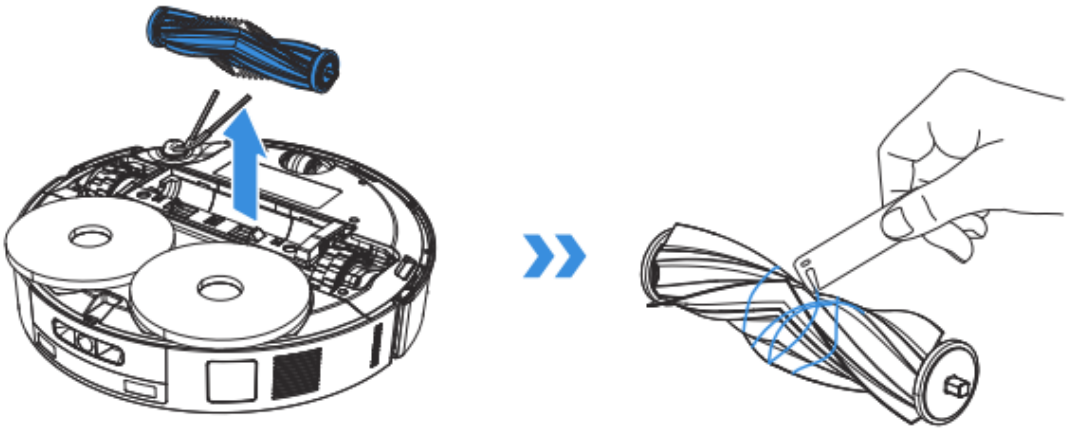

3. Remove the brush comb, clean it, then wipe it dry.



4. Install the brush comb, the main brush and the main brush cover.

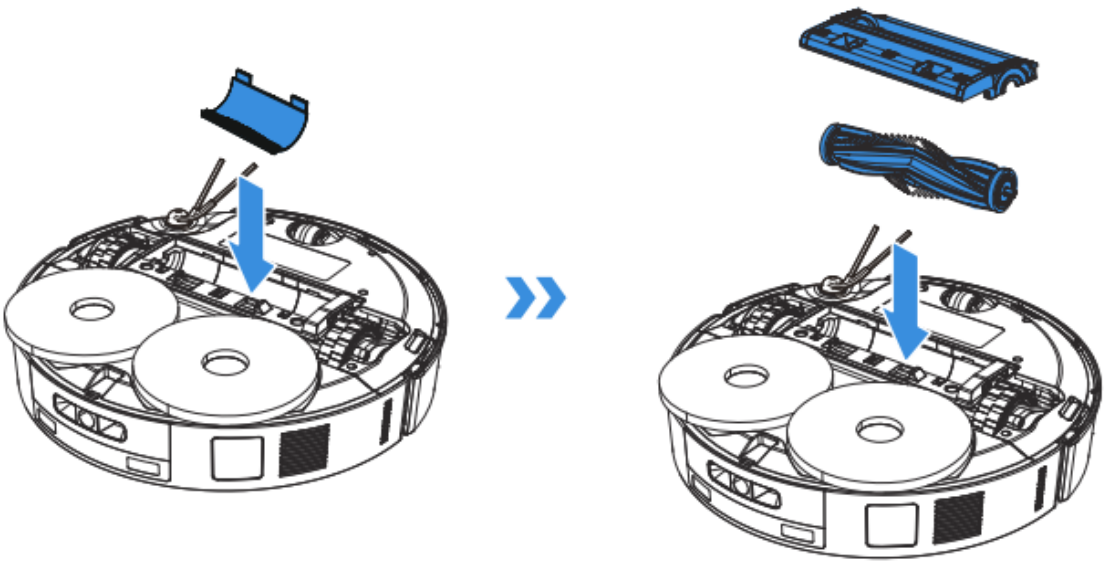

Clean the Side Brush

1. Remove and clean the side brush.

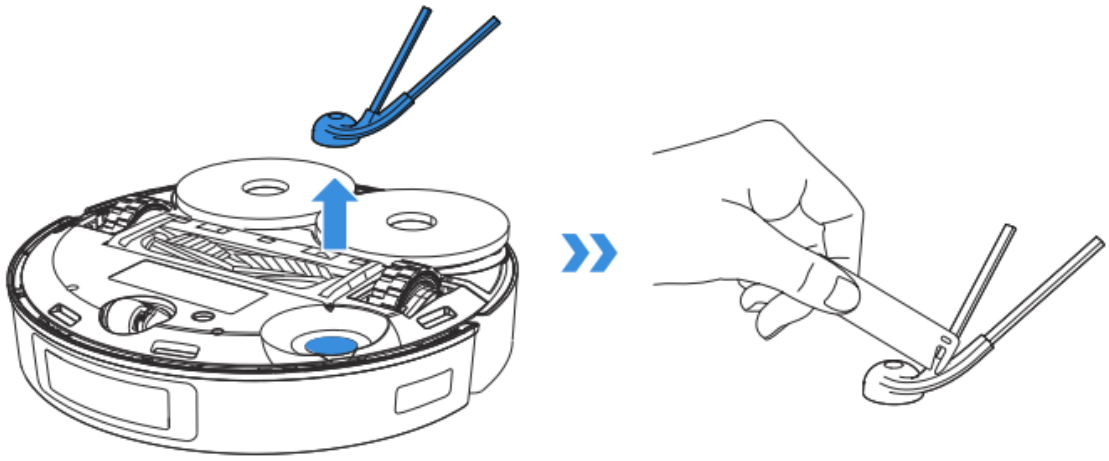

4 Maintain Other Components

Note: Explore more accessories at ECOVACS HOME App or at **https://www.ecovacs.com**.

- Wipe the components with a clean, dry cloth. Never use a wet cloth. Do not use cleaning sprays or detergents.
- Charging contacts contain sensitive electronic components. Clean them with a dry cloth. Do not use a wet cloth to prevent water damage.

Clean the obstacle avoidance module

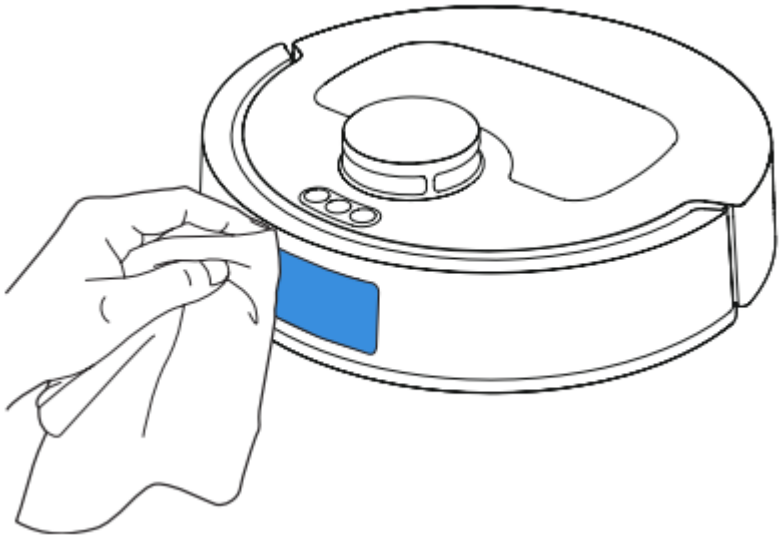

Clean the bumper

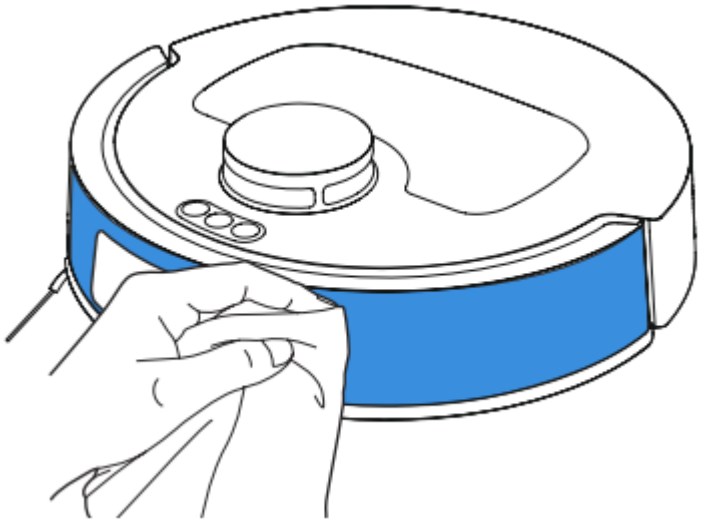

Clean the navigation module

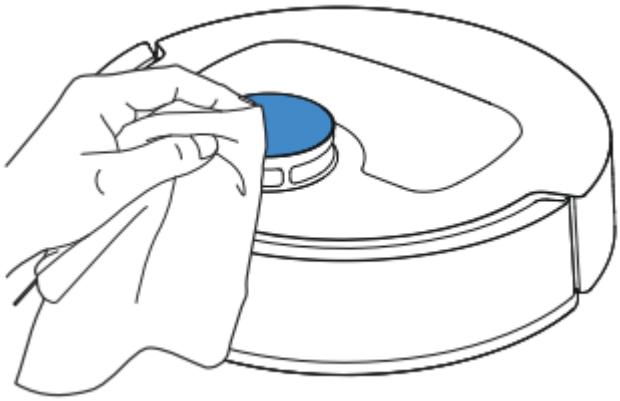

Clean the charging contacts

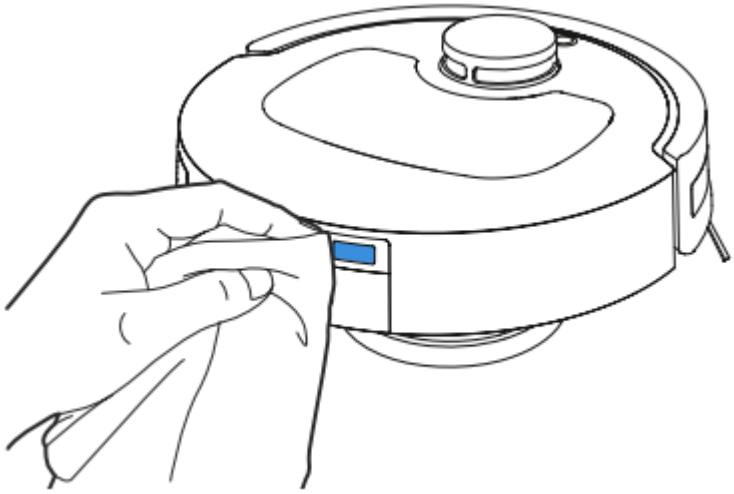

Clean the edge sensor

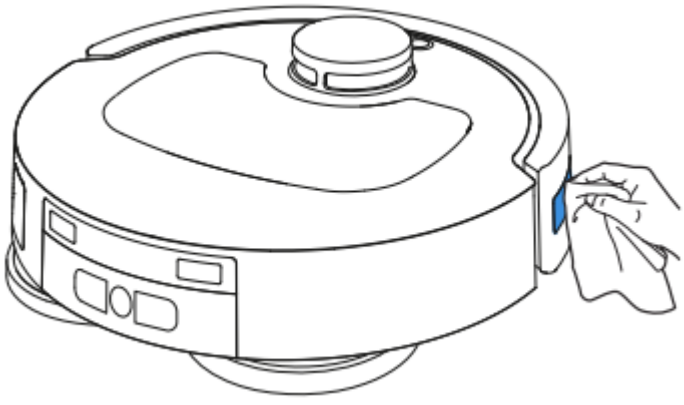

Clean the Anti-drop sensor

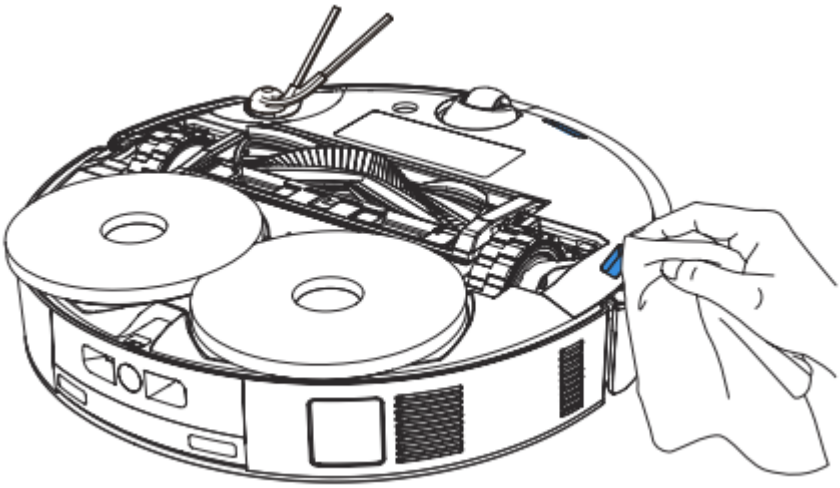

Clean the universal wheel and driving wheels

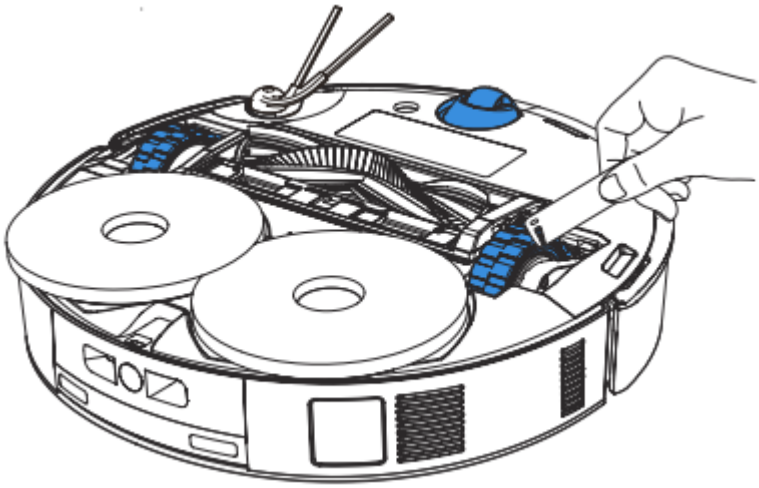

5 Maintain Dust Bin

1. Discard the dust bag.

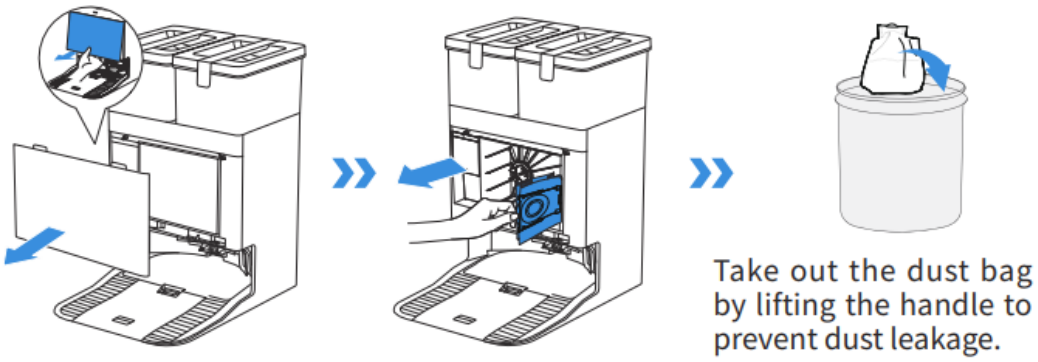

2. Clean the dust collection cabin with a dry cloth and put a new dust bag in.

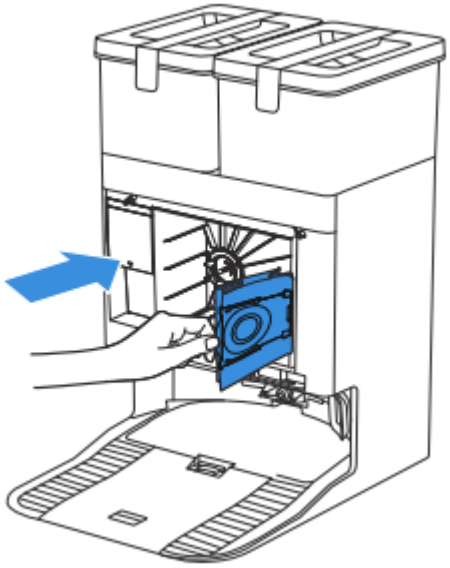

3. Insert the top of the dust collection cabin cover into the groove, and press it down to ensure it is closed.

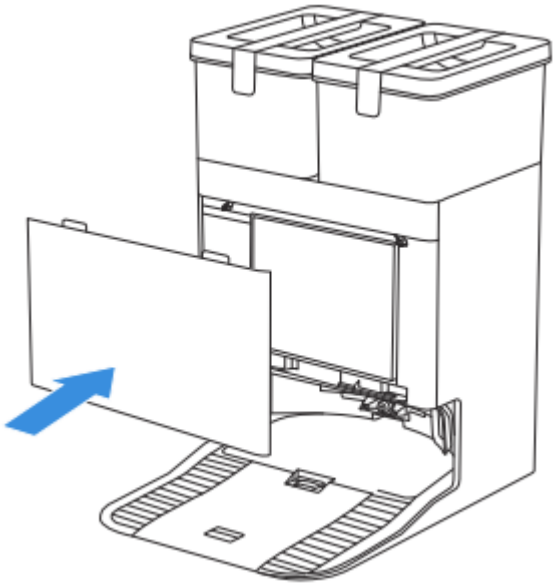

6 Maintain Mop Washing Tray

1. Take off the base and the mop washing tray and clean them.

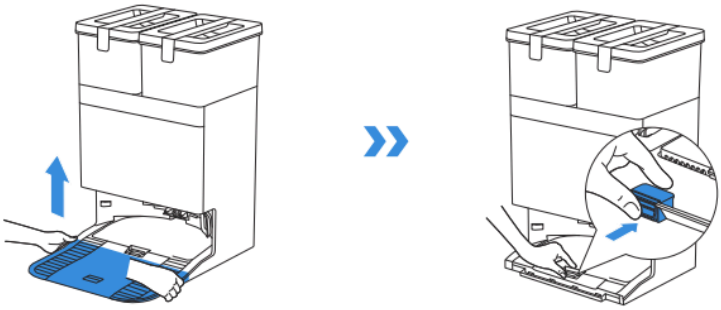

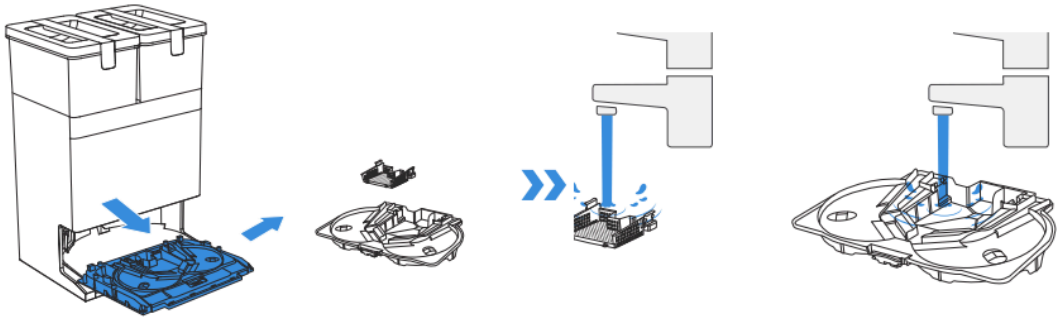

2. Install the cleaned base and mop washing tray.

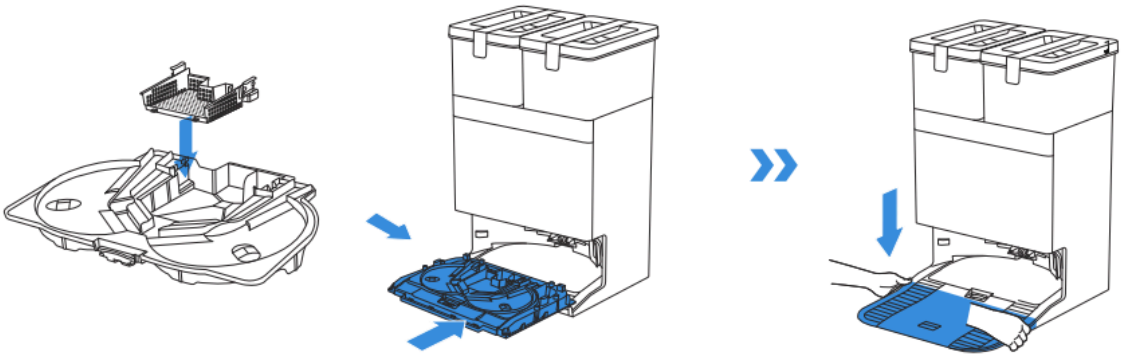

Note: Please install the mop washing tray properly for smooth operation.

7 Storage

Please fully charge and power off the robot before storage. Place the robot back at the station before pressing and holding [icon] for 3 s to power off the robot. Please recharge it every 1.5 months to prevent the battery from over-discharging.

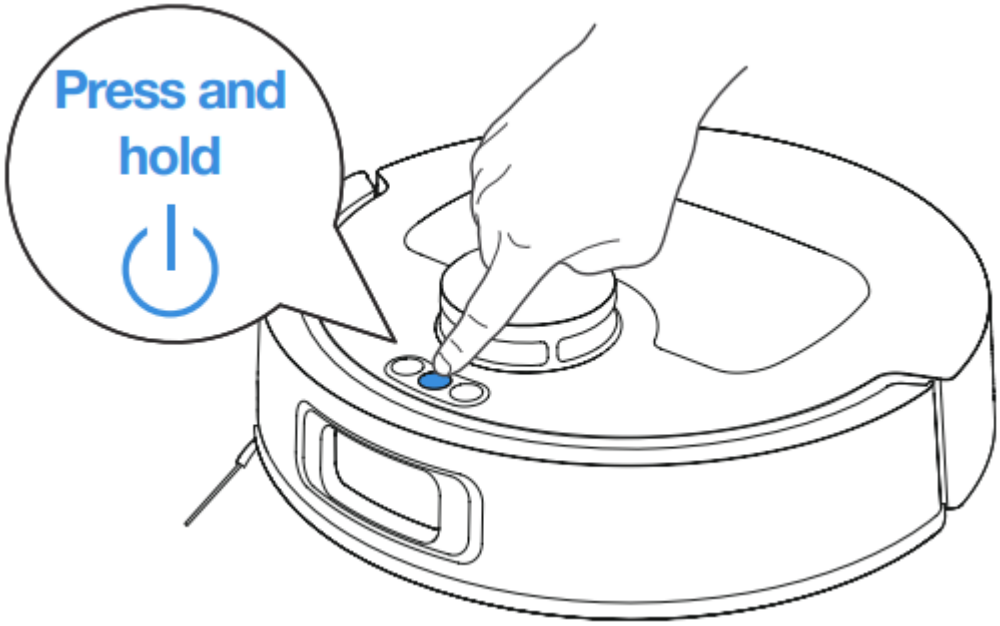

The robot cannot be charged when it is powered off.
* When the robot is not working, it is recommended to keep it powered on and charging.
* If the battery is over-discharged or not used for a long time, the robot may not be able to be charged. Please contact Customer Care for help. Do not disassemble it by yourself.

TROUBLESHOOTING

If you encounter the following during Appliance use, please refer to the table below for solutions.

No.	Malfunction	Possible Cause	Solution
1	The robot cannot connect with the ECOVACS HOME App.	Incorrect Wi-Fi name or password entered.	Enter the correct Wi-Fi username and password.
		The robot is not within Wi-Fi signal coverage.	Make sure the robot is within range of your home Wi-Fi signal. Try to stay as close to the router as possible.
		The robot is not in the configuration state.	Press the RESET button, the robot will enter the configuration state when you hear a voice prompt. If the network configuration fails, reconfigure the network according to the prompts of the App.
		There is no home Wi-Fi on the Wi-Fi list.	1. Check if the Wi-Fi name contains special characters. Please do not use special characters like ! @#& ¥%/. 2. Do not use a 5 Ghz network.
		Incorrect App installed.	Please download and install the ECOVACS HOME App.
		Not using a 2.4 GHz or 2.4/5 GHz mixed network.	The robot does not support 5 GHz networks. Please use a 2.4GHz

			or 2.4/5 GHz mixed network.
2	Map lost.	The map may be lost if you move the robot when it is cleaning.	Move the robot to the front of the station to restore the map. Find the stored map in Map Management and tap “Use This Map” to restore it. If this problem persists, please restart mapping.
		Moving the robot when it is cleaning might cause the map to be lost.	During cleaning, try not to move the robot.
		Auto cleaning is not complete.	Make sure the robot automatically returns to the station after cleaning.
3	Unable to create a map in the App.	Moving the robot when cleaning might cause the map to be lost.	During cleaning, do not move the robot.
		Auto cleaning is not finished.	Make sure that the robot automatically returns to the station after cleaning.
4	The side brush fell off.	The side brush is not properly installed.	For proper installation, make sure you hear a “click” when installing the side brush.
5	No signal was found. The robot	The station is not properly placed.	Place the station properly according to the instructions in the

cannot return to the station.		[Power on and Charge robot] section.
	The station is out of power or moved.	Check whether the station is connected to a power supply. Do not move the station.
	The robot did not start cleaning from the station.	It is recommended that the robot start cleaning from the station.
	The charging route is blocked. For example, the door of the room in which the station is located is closed.	Keep the charging route clear of obstructions.

6	The robot returns to the station before finishing cleaning.	The room is too large and the robot needs to return to the station for recharge.	Please enable Auto Resume. For more details, please follow the instructions on the app.
		The robot is unable to reach certain areas blocked by furniture or barriers.	Tidy up the area to be cleaned by putting furniture and small objects in proper places.
7	The robot cannot charge.	Charging contacts on the robot are not connected to those on the station.	Make sure that the robot's charging contacts are connected to the station's, and the button on robot is flashing. Check whether the charging contacts on the robot and the station are dirty. Please clean them according to the [Maintenance] sections.
		The station is not connected to a power supply.	Make sure the station is connected to a power supply.
		The base is not properly installed.	Please refer to the [Quick Start] section to install it properly.
		The battery will be over-discharged if the robot is not used for a long time.	It is recommended to regularly use the robot. If the battery cannot be charged because it has not been used for a long time, please

			contact Customer Care for help.
8	Loud noises during cleaning.	The main brush/side brush is entangled, or the dust bin/filter is blocked.	It is recommended to clean the main brush, side brush, dust bin, filter, etc. regularly.
		The robot is in max mode.	Switch to standard mode.
9	The robot gets stuck while working and stops.	The robot is tangled with objects on the floor (electrical wires, curtains, carpet fringing, etc.).	The robot will try various ways to free itself. If it is unsuccessful, manually remove the obstacles and restart.
		The robot might be stuck under furniture with an entrance of similar height.	Please set a physical barrier, or set a virtual boundary via the ECOVACS HOME App.
		The robot is stuck in a narrow area.	Tidy up your home, set a physical barrier, or set a virtual boundary via the ECOVACS HOME App.
10	The robot encounters issues like a disorderly route, biased movement,	Objects such as wires and slippers on the ground affect the robot’s normal operation.	Before cleaning, please tidy up scattered wires, slippers, and other objects on the ground as much as possible. If there are any missing areas during cleaning, the robot will return to ensure they are thoroughly cleaned.

repeated passes over the same spots, and missing small areas. (However, if the robot temporarily misses a large area, it automatically returns to make sure it is thoroughly cleaned.)		Please do not intervene (such as moving the robot or blocking its route).
	The driving wheels may slip on the ground when the robot climbs steps, thresholds, and door bars, affecting its ability to navigate the entire house environment.	It is recommended to close the door of the affected area and clean the area separately. After cleaning, the robot will return to its starting location. Please feel assured to use this method.
	On freshly waxed or polished floors, as well as smooth tiles, there may be less friction between the driving wheels and the floor.	Please wait for the wax to dry before cleaning.
	Due to variations in home environments, some areas cannot be cleaned.	Tidy up your home environment to ensure that the robot can enter for cleaning.

11	The robot does not empty the dust bin after returning to the station.	Dust collection cabin is not closed.	Please close the dust collection cabin.
		The Auto-Empty function has not been turned on in the ECOVACS HOME App.	Turn on the Auto-Empty function in the ECOVACS HOME App.
		Dust bag is not installed in the station.	Install the dust bag, and close the dust collection cabin.
		Manually moving the robot back to the station might not trigger the auto-empty feature.	It is recommended to let the robot return to the station on its own. Please do not move it manually.
		In Do Not Disturb mode, the robot will not empty the dust bin after returning to the station.	Cancel Do Not Disturb mode in the ECOVACS HOME App or manually start dust emptying.
		If the above causes have been ruled out, it may be due to an abnormality in station components.	Please contact customer care for help.
12	The robot fails to empty the dust bin	The OMNI station detects a decrease in empty efficiency.	Replace the dust bag according to the [REGULAR MAINTENANCE] section and close the dust collection cabin. If

			the dust bag is not full, you can take it out and put it back in.
		The dust disposal port is blocked by foreign objects.	Take out the dust bin and remove foreign objects from the dust disposal port.
13	The inner side of the dust collection cabin is dirty.	Fine particles are absorbed in the inner side of the dust collection cabin through the dust bag.	Clean the inner side of the dust collection cabin.
		The dust bag is broken.	Check and replace the dust bag.
14	Dust leaks when the robot is working.	The dust disposal port is blocked by foreign objects.	Take out the dust bin and remove foreign objects from the dust disposal port.
15	Mopping pad plates cannot rotate.	The Mopping Pad Plates are not correctly installed.	Install the mopping pad plates properly. Press the mopping pad assembly into the mounting slots for mopping pad assembly until you hear a “click.”
		The Mopping Pad Plates are blocked by foreign objects.	Please remove foreign objects.
16	The robot does not respond to the	The robot is too far away from the station.	If the robot is not within the available distance, you can also use the ECOVACS

Station’s instructions.		HOME App to control the robot.
	The robot and the station are not paired.	Unplug the station and wait for 10 s before plugging it back in. Power off the robot and then turn it back on. Manually push it back to the station and ensure the charging contacts are properly connected. The robot will start charging, and a voice prompt will indicate successful pairing.

17	The driving wheels are jammed.	The driving wheels are entangled or jammed by foreign objects.	Please rotate and press the driving wheels to check for and remove any foreign objects that are entangled or jammed. If this problem persists, please contact customer care for help.
18	The water in the mop washing tray is full and cannot be drained.	The Dirty Water Tank is not properly installed.	Gently press the dirty water tank down to ensure it is properly installed.
		The sealing plugs in the Dirty Water Tank are not installed properly.	Make sure that both sealing plugs are properly installed.
		The Station cannot drain water normally.	Press and hold to see if the station drains water normally. If the problem occurs during the cleaning process for mopping pads, end the task via the App, and then press and hold to see whether the station drains water properly. If water is successfully drained, wipe the water overflow sensor of the mop washing tray dry. If the Station fails to drain water, check between the dirty water tank and the station for

			foreign objects and remove them.
		The suction port of the Mop Washing Tray is blocked by foreign objects.	Ensure that there is no foreign object in the suction port of the Mop Washing Tray.
		Mop Washing Tray is dirty.	Take out the mop washing tray and rinse it with clean water.
		If there is no water in the mop washing tray, check if the float is stuck and fails to lower to its correct position.	Take out the mop washing tray and place the float in its correct position.
		The problem still exists after trying the above solutions.	Unplug the station and plug it in again. If this problem persists, please contact Customer Care for help.
19	Mopping pad plates cannot lift automatically.	Mopping pad plates are entangled or jammed by foreign objects.	Please remove foreign objects.
		Mopping pad plates fell off.	Reinstall the mopping pad plates and make sure you hear a “click” indicating the mopping pad plates are properly installed.

TECHNICAL SPECIFICATIONS

Model	**DLX88**		
Rated Input	20V 2A	Charging Time	about 4.5h
Station Model	**CH2471B**		
Rated Input	220-240V 50-60Hz	Rated Output	20V ⎓ 2A
Rated Input Current(Charging)	0.5A	Power(Emptying)	650W
Power(Water Washing Mop)	35W		
Frequency Bands	2400-2483.5MHz		
Networked Standby Power	Less than 2.00W		

Output power of the wireless module is less than 100mW.
Note: Technical and design specifications may be changed for continuous product improvement.
Explore more accessories at **https://www.ecovacs.com**.

Based on product requirements (functionality and user experience), our products use a non-ultra-low power appliance architecture, so there is no off mode and no standby mode. After the machine is fully charged, it will enter the network standby mode within 20
minutes. Networked standby mode power is 1.4 W.

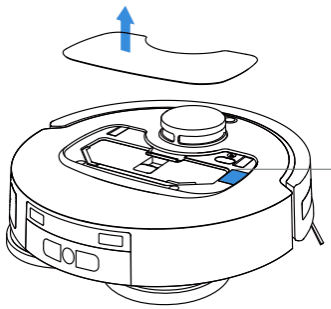

Please use the mobile camera to scan the QR code and obtain the user guide.

Documents / Resources

[DEEBOT T30e OMNI Robotic Vacuum Cleaner]

Instruction Manual · T30e, DEEBOT T30e OMNI Robotic Vacuum Cleaner, DEEBOT T30e OMNI, Robotic Vacuum Cleaner, Vacuum Cleaner, Cleaner

References

[ecovacs.com]